On Network Arches
for Architects and Planners

The network arch is an esthetic and economical arch bridge that the author came to think of when he was working on his master's thesis in 1955. A network arch is a bridge where some inclined hangers cross each other at least twice. See fig. 1 and 2. Often it saves 50 to 70% of the steel weight needed in steel bridges. See fig. 3.

This publication stresses the elementary. It tells about simple calculations that can be done prior to putting the problem into the computer. The history of the network arch is stressed. More history can be found in "Systematic Thesis" chapter J, on the author's homepage.

Fig 1. The first Network Arch opened at Steinkjer in 1963. Span 80m (Tveit 1964)

It is a mistake that there are no railings between the hangers and the road traffic.

The format for references is usually: (Herzog 1975) or Steere (2008). They can be found in the list of literature. There are two important exceptions to this rule. That is "The Network Arch" (TNA) and "Systematic Thesis". These can be found on the author's homepage http://home.uia.no/pert . They are updated at irregular intervals.

Last updated: January 29, 2013

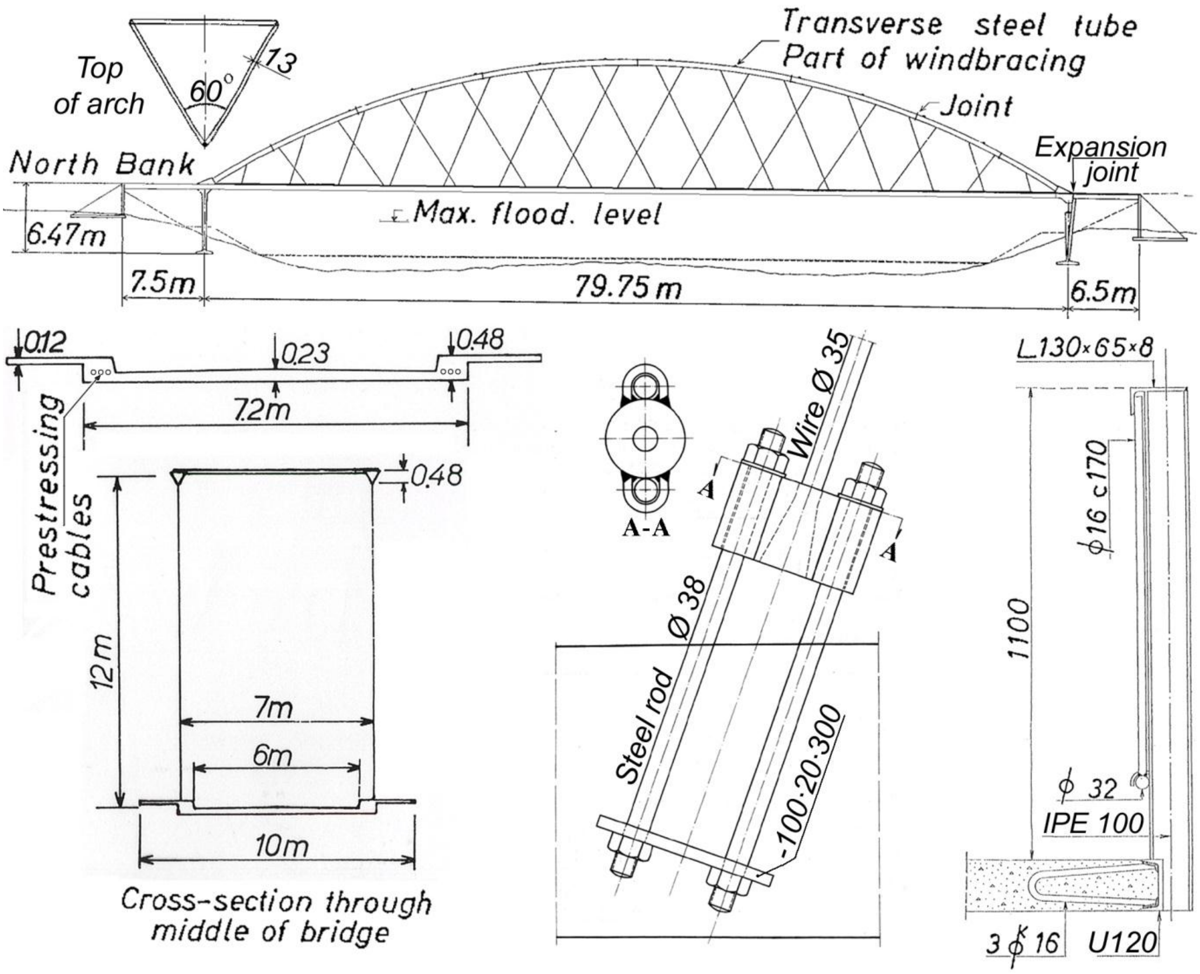

Fig. 2. Structural details for the Network Arch at Steinkjer

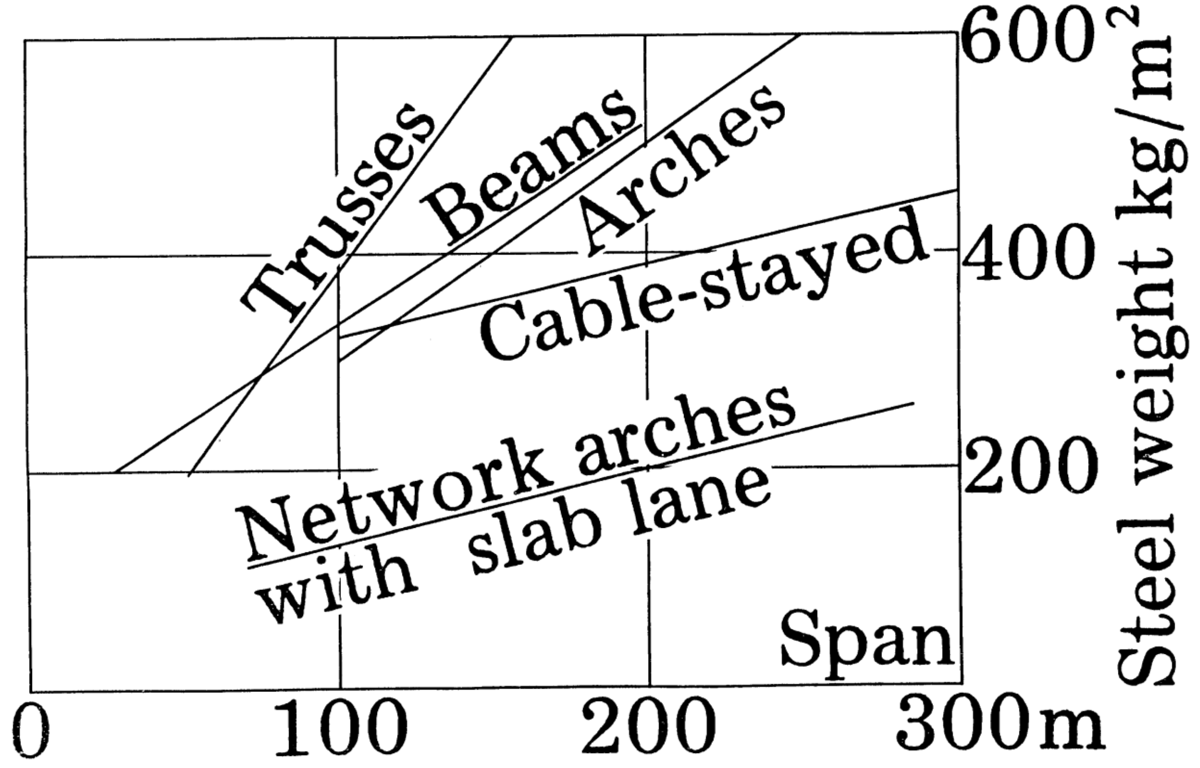

Fig. 3 shows the weight of the steel per square meter bridge area. The author has calculated the weight of the network arches. Hertzog has assembled the steel weight of the other bridge types. (Herzog 1975)

Steel is best utilized in tension and here the hangers are in tension. This utilizes the steel very well if fatigue can be avoided. Compression in the arch can lead to buckling, but in the plane of the arch the hangers give good support. So does the wind-bracing. Therefore the arch can utilize high strength steel.

The simplest lower chord is a concrete plate with edge beams with room for longitudinal prestressing cables. The concrete slab tie is best for two lane road bridges and two track railway bridges. The bending in the concrete tie is smallest if the footpaths are outside the hangers.

If the distance between the planes of the arches is more than 10 meters, transverse prestressing should be considered.

Fig. 4 The network arch looked like this before it got its final coat of paint.

The architect wanted the arch to be painted red, but the courage failed the author, and today the bridge is grey. Many years later when the author saw the red arch bridges in China, he understood that the architect had been right. The architect, Terje Moe, was very able. He said: “You know how the forces run inside the bridge. Let the design show this.” Later Terje Moe became a professor of architecture.

The diagonals in the wind bracing are round steel rods, except for the diagonals between the first and second tube in the wind bracing. These are hangers like the ones used between the arches and the lower chord.
The small diamonds on top of the arch compensate for the plates under the arch to which the hangers are fastened. Furthermore they make the arches straighter between the nodal points in the arch. That leads to less bending in the arch. The diamonds also look good.
The joints in the arches have simple flanges because there is hardly any bending in the arch.

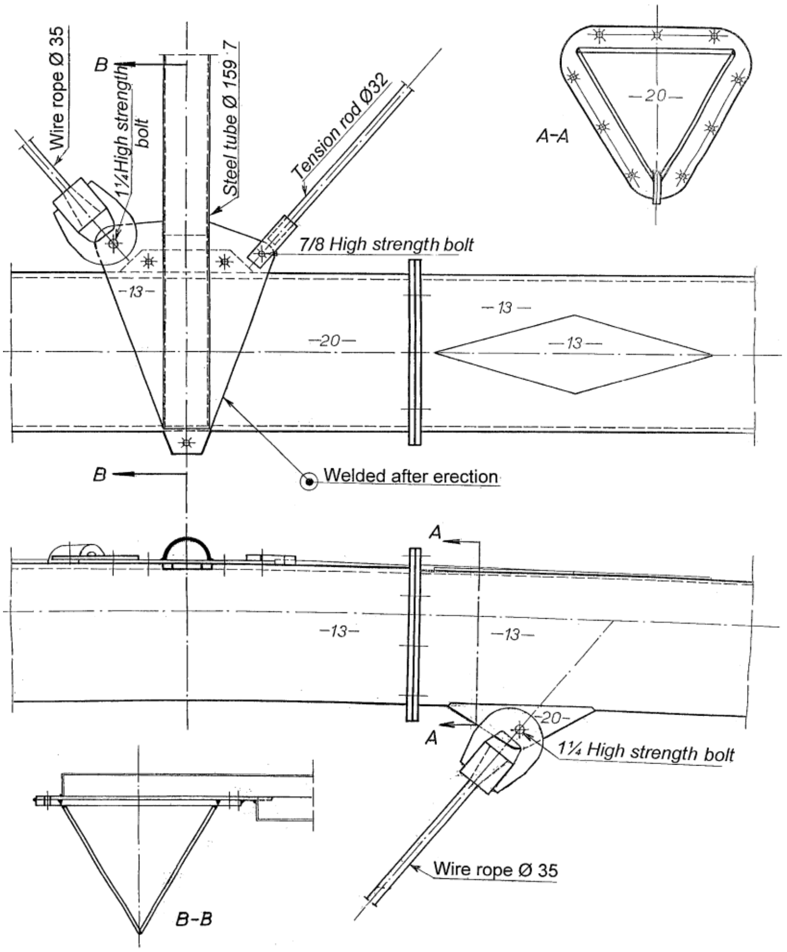

Fig 5 shows details of the second tube in the wind bracing at Steinkjer

In his master’s thesis the author was supposed to work on calculations of the Nilsen bridges.

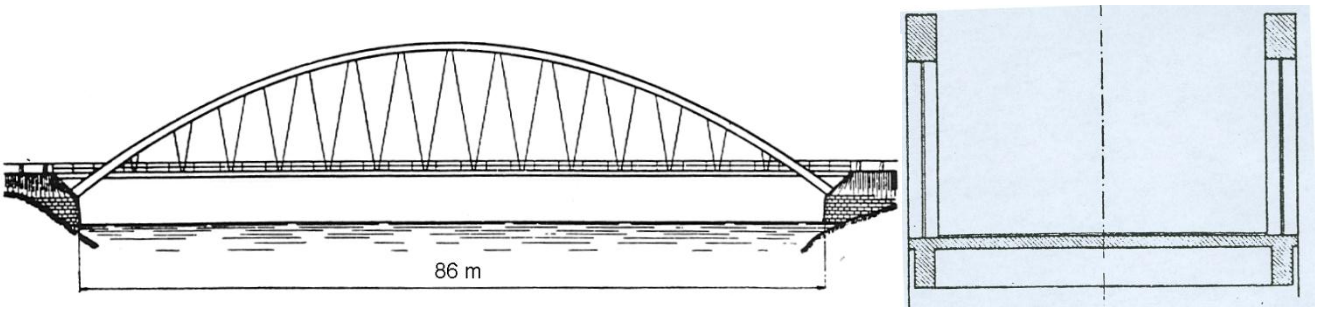

Fig. 6. Around 60 Nielsen Bridges were built in Sweden between the two world wars

In his doctoral thesis (Nielsen 1929) showed how his bridges could be calculated. My professor dr. techn. Arne Selberg thought that maybe this bridge type should be built in Norway. The hangers are sloping. For load on one side of the span many hangers relax. O.F. Nielsen never crossed the hangers of his bridges, but in a patent application from 1926 he showed crossing hangers. (Nilsen 1932)

Fig. 7. Bridge from Nielsen’s patent application

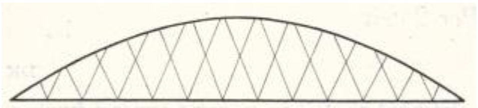

The relaxation of hangers has never been a problem, even though hanger loads have increased a lot. Today we have strong materials and much bigger traffic loads. Thus the network arch seems to have great advantages.

Professor Selberg wrote that it was hard to evaluate the author’s master’s thesis. The mark 1.75 was probably influenced by the fact that the author had not concentrated on the task that he had been given.

After graduation from the **University in Trondheim**

The author was given a meager scholarship to study at the Technical University in Aachen in Germany. He planned to study prestressed concrete. The professor of concrete turned the author down. Maybe he had not bowed deep enough. It was 10 years after the Second World War, and the library had lent out all the books on prestressed concrete.

The author continued his work on network arches. A central problem was how the slope of the hangers influenced their tendency to relax. The great authority Professor Ferdinand Schleicher (Taschenbuch für Bauingenigenieure) doubted that there was a connection. Professor Phillip Stein helped the author to build a model that showed a connection between the slope of the hangers and their tendency to relax.

After a year in Germany Professor Stein wrote a recommendation which the author took to Trondheim. The author wanted to continue his work on network arches. He could not get any money for that, but he could get a scholarship towards taking a licentiate degree. Those scholarships were so small that there was a shortage of able applicants.

The author suggested that he should do his licentiate on network arches. Prof. Selberg did not like the idea. Then the author wrote a 10 page explanation of his ideas.

From then onward Professor Selberg supported the author’s work on network arches for many years. A 4 m long model of a 100 m network arch was built. See fig 8. and (Systematic Thesis of Network Arches, fig. J5 and p. J-4) Professor Selberg provided funding for much of the reading of the strain gauges.

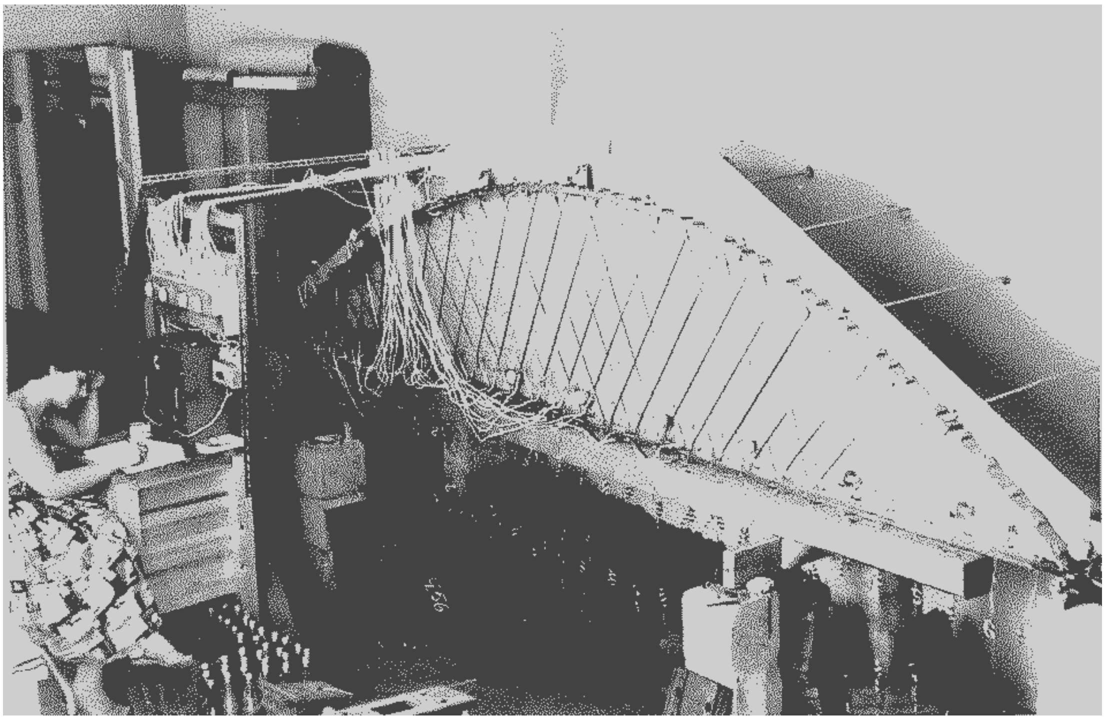

Fig. 8. My second model of a network arch was 4 meters long, and had many strain gauges

I handed in my thesis in 1959 (Tveit 1959). The author thinks that Professor Selberg was disappointed in the result. That is easy to understand.

To prevent the patenting of his ideas, the author published an article in Arbeider Avisa in Trondheim 10.10.59. The article said “The network arch is so light because there is little bending. Compression members have good sideways support, and there are many tensible members. Compared to most bridges today, half the steel might be saved”.

“The tie uses a simple slab of prestressed concrete”. ”A bridge with a span of 100 m could need around 120 t of steel. For the same span, width and load estimates tables based on experience put the steel weight between 248 and 458 t” – “The bridge type can of course be used everywhere, but it is extra competitive on soft soils. It will be very favourable when whole bridge spans can be transported to the pillars”.

“Mainly two things prevented arch bridges with crossing hangers from being built:
1. Before the Second World War, little could be gained by crossing hangers with the material and traffic loads that could be foreseen.
2. Computers and metering equipment suitable for calculating these bridges were not available. This has changed now”

Town Engineer Balgaard in Steinkjer read the article in Arbeider Avisa. He thought that new and promising ideas should be tried. My classmate from the Norwegian Technical University, Asbjørn Auran, was assistant engineer in Steinkjer. That I was an assistant to Professor Selberg increased Balgaard`s trust in me. Selberg was the number one expert on bridges in Norway for many years. Balgaard asked me to design a network arch over a river near the center of Steinkjer. See fig. 1, 2, 4 and 5.

Around that time the Swedish aircraft company SAAB came to the university in Trondheim to sell a computer. Their calculations made it possible for the author to draw the influence lines in fig. 9. See next page. The result of the calculations agreed well with the assumptions the author had made in advance. That was good, because the author could not have altered the dimensions and have calculated the network arch once more.

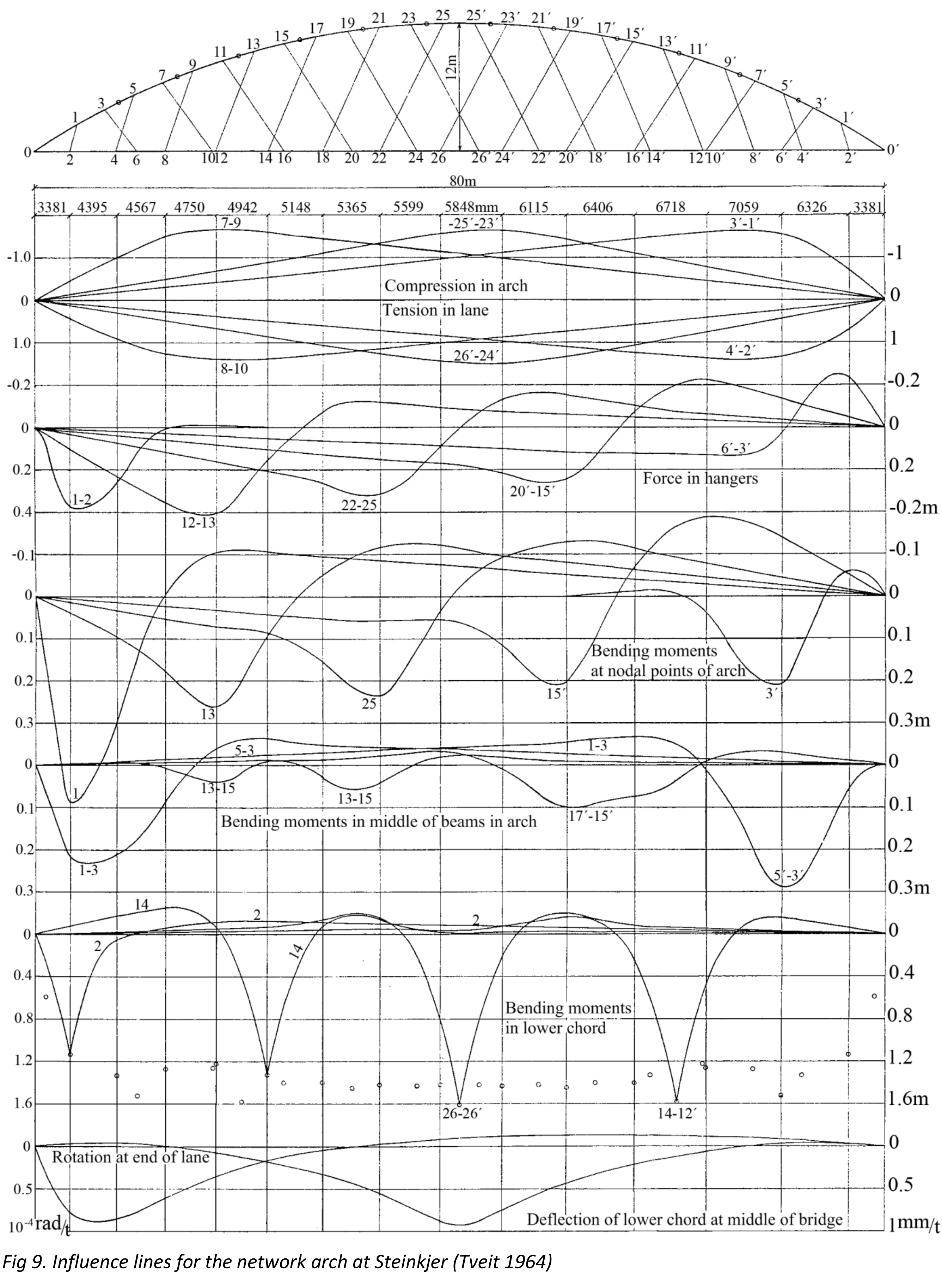

Fig 9. Influence lines for the network arch at Steinkjer (Tveit 1964)

The steepest hangers have 74.4° angle with the lower chord. The difference in the slope of hangers next to each other is 1.8°.

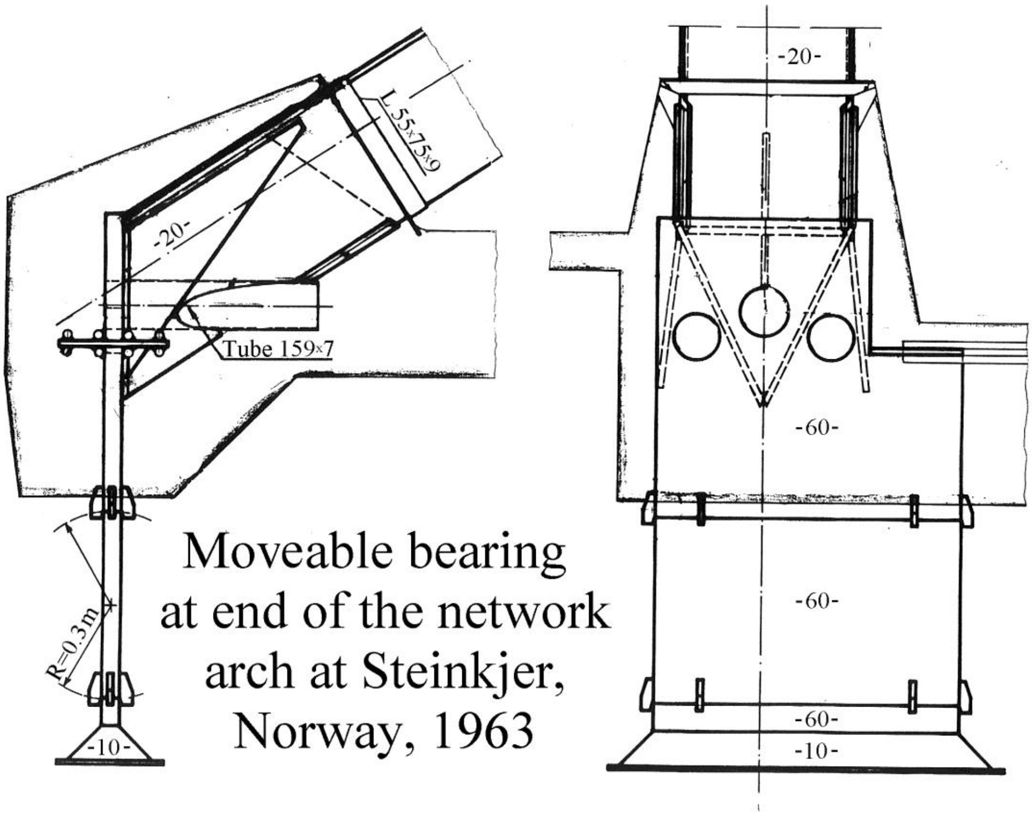

Fig 10. Shows the node between the arch and the lower chord

Dowels are not shown. How the vertical bearing in fig. 10 can be calculated is shown in (Selberg 1972) around page 564.

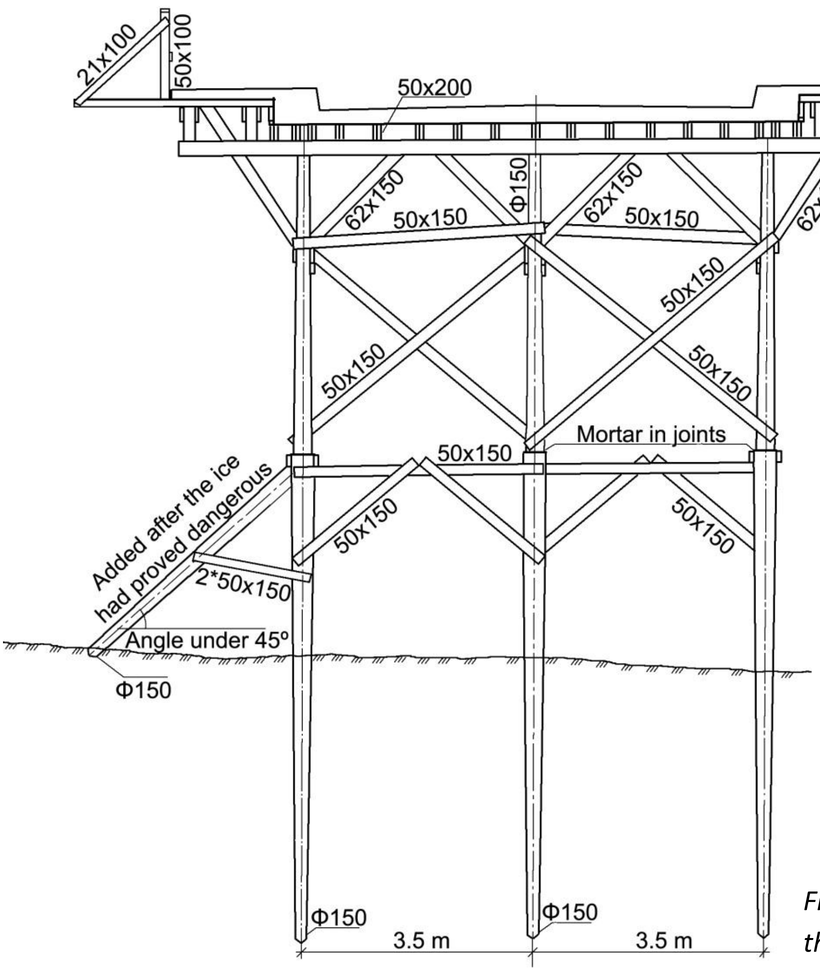

Fig. 11. Cross section of scaffolding under the network arch at Steinkjer (Tveit 1964)

Fig. 12 shows the erection in the winter of 1963

The bridge was meant to be finished in the autum of 1962. The delivery of the steel was delayed. The ice nearly destroyed the scaffolding under part of the concrete lane. The scaffold was repaired, but the concrete lane got over 20 cm deflection and cracks over 2 mm. When the steel came, the arch and the hangers were erected. See fig. 12.

Then the hangers were adjusted to give the bridge the right shape and the scaffold could be removed. Fig. 12 shows erection of the arch in the winter of 1963. The bridge is still in good shape after 50 years. (Tveit 2007)

I wanted to design a network arch for the Norwegian Public Roads Authority. Professor Selberg supported the idea, but the public roads dragged their feet and argued against the idea. Then my mother went to Oslo and spoke to her brother. He was the permanent secretary to the minister of transport. Suddenly it was decided that the Bolstadstraumen Bridge should be a bridge with the tie under the arch. The bridge office of the public roads designed an arch with vertical hangers.

The author designed a network arch. The terms were: No cure, no pay. The author expected to win, even if the rise of the arch was 0.215 of the span for the public road. The rise of the network arch was limited to 0.18 times the span. The network arch needed 42 t structural steel and 7 t prestessing steel. The public roads alternative needed 125 t of structural steel. Both bridges had a concrete slab between the planes of the arch. The network archh was about 20% less costly.

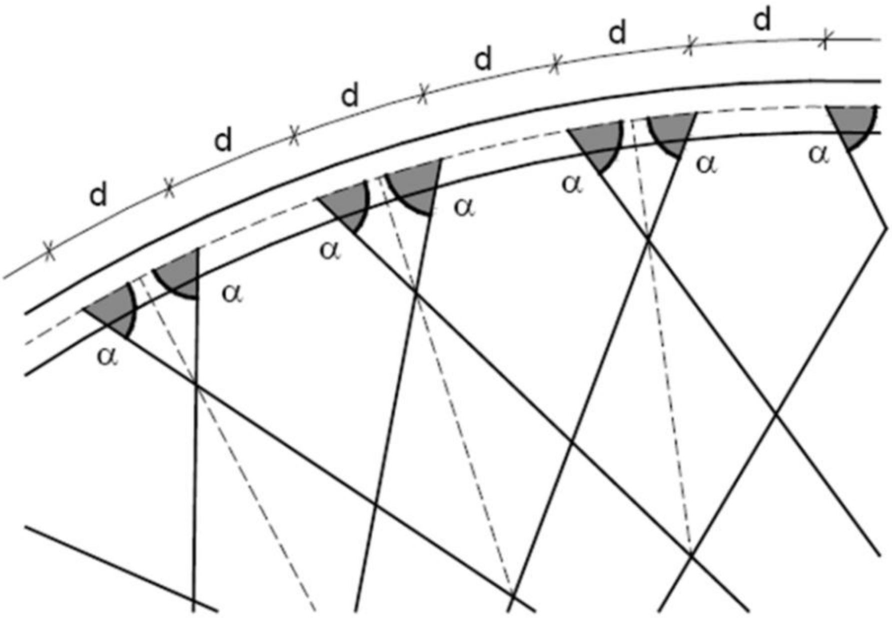

Fig. 13 A simple and economic pattern for placing the hangers

The author wanted to control the building of the Bolstadstraumen Bridge, but that job was given to the engineer who had designed the unsuccessful alternative. He came to the bridge 12 hours after the casting had started. The vibrating was not always good. The concrete did not always get through the lowest layer of reinforcement. More about the control in (Tveit, Systematic Thesis on Network Arches J9 and J10.)

On a lecture tour in the year 2000, the author met Prof. Dr. Ing. Habil Wolfgang Graße in Dresden in Germany. He liked the network arch and sent me many good students who wrote their master's thesis in Grimstad. The marks were decided in Dresden.
(Brun and Schanack 2003) are responsible for the best pattern for placing the hanger when the arch is part of a circle and the lower chord is a concrete slab. See fig. 13.

There should be a constant angle between the arch and the hangers.
A smaller angle α gives less relaxation of hangers.

If you want to know more about the network arch, the author recommends (Schanack, F. and Brunn, B. "Analysis of the structural preformance of network arch bridges" January 2009. pp- 7-13)
Now Frank Schanack is a professor in Chile.

An elliptic arch gives the shortest wind portal and less steel, but the arrangement in fig. 13 is simplest. A parabolic arch is best when the hangers are vertical and it is imperative to avoid defomation due to creep and shrinkage.

When there are transverse beams in the lower chord, it is probably best to have a constant angle between the hanger and the lower chord. It also looks best.

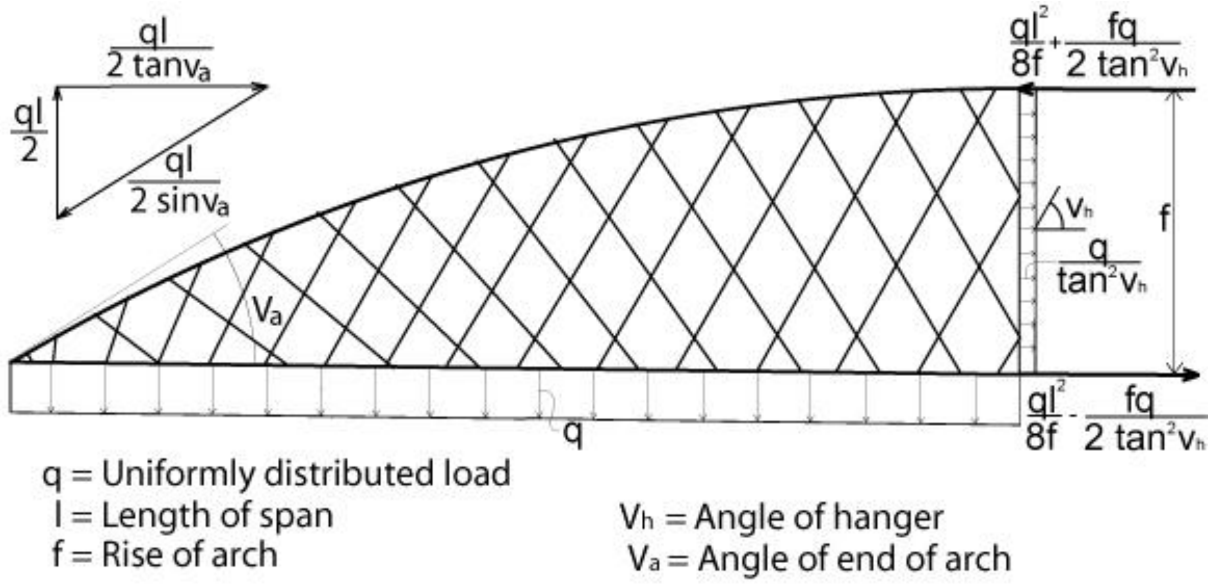

Fig. 14. Sketch that shows axial forces due to an evenly distributed load

A single concentrated load P_e is equal to an evenly distributed load $2p_e/l$.
Usually it is practical to have one cross-section in most of the arch, another cross-section just above the wind portal, and a bigger cross-section in the lower ⅓ or ¼ of the wind portal.

(S. Teich and S. Wendelin 2001) did their master's theses in Grimstad. They calculated the network arch in fig. 15.

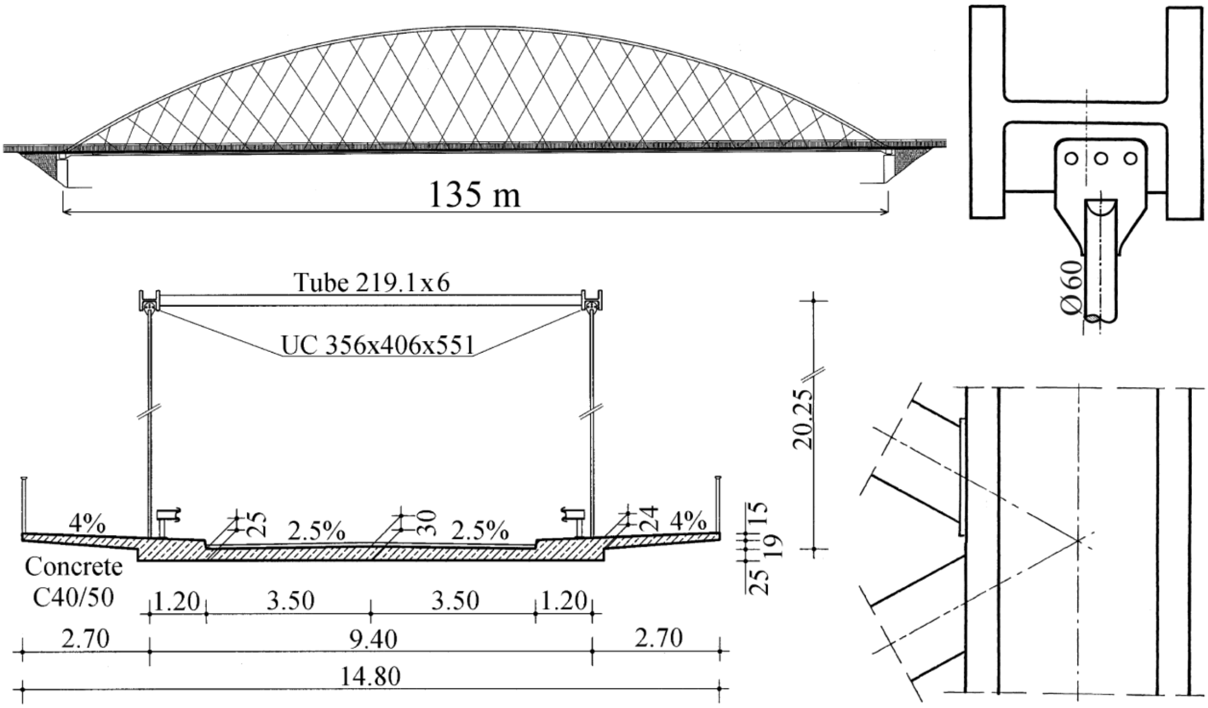

Fig. 15 shows a network arch for the Åkvik Sound in Norway (Teich and Wendelin 2001)

In fig. 16. the steel weight of the Åkvik Sound Bridge is compared to German arch bridges with vertical hangers. N means that the bridge has no windbraces. S means the arches slope towards each other.

The German bridges have steel beams in the lower chord. Still they use around the same amount of reinforcement that the Åkvik Sound network arch. That is partly because there is more minimum reinforcement over beams in tension. A temporary lower chord for Åkvik Sound Bridge (dotted area) would weigh around 45kg/m^2 between the outer railings of the bridge.

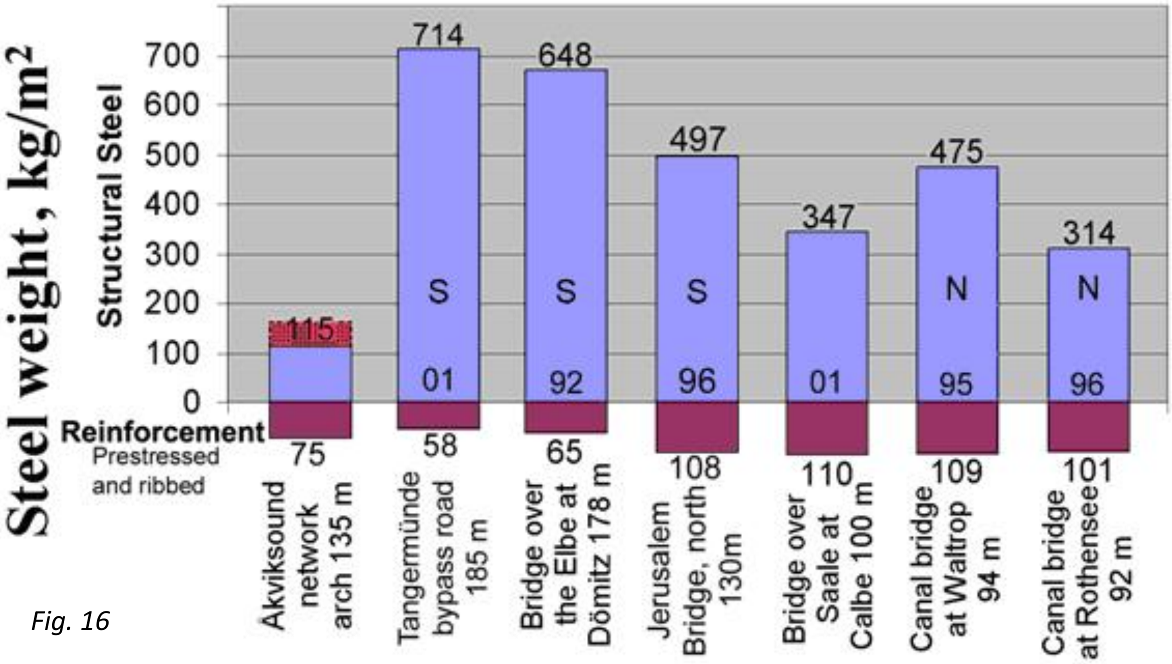

Fig. 16

From fig. 16, it can be seen that the German bridges need 2 to 4 times as much structural steel as the Åkvik Sound Bridge. The lower steel weight is a great advantage if a steel skeleton is lifted into place. See fig. 17.

Uglen is the biggest Norwegian floating crane. It can lift up to 600t 60m over the water. For bigger loads two cranes can carry the weight.

The steel skeleton can be made even lighter if there are steel tubes in the arch. The steel tubes can be filled with high strength concrete when the span is in place.
Tubes in the arches reduce the wind load considerably.

Fig. 17. «Uglen» lifting the main span in the Åkvik Sound Bridge

When the concrete in the arch has sufficient strength, the lower chords are cast. Usually the edge beam would be cast from both ends to prevent the relaxation of hangers during the casting. More on this in TNA p. 30a.

Permament steel beams in the chords lead to deeper lower chords. This does not look so good and leads to longer ramps. Concentrated wheel loads lead to a certain amount of reinforcement. We need only a little more reinforcement to take the wheel loads to the edge beams. The forces distribute themselves, so that the bending in the lower chord becomes smaller. Usually the bending in the chords is smaller in the ends of the spans.

Fig. 18 shows a temporary lower chord for the erection of a steel skeleton of a network arch. The longitudinal tie in the skeleton can be very slim.

That is because the prestressing cables take most of the tension in the lower chord even before the concrete tie is cast.

The fact that the prestressing cables are in tension before they get concrete around them reduces the friction along the cables.

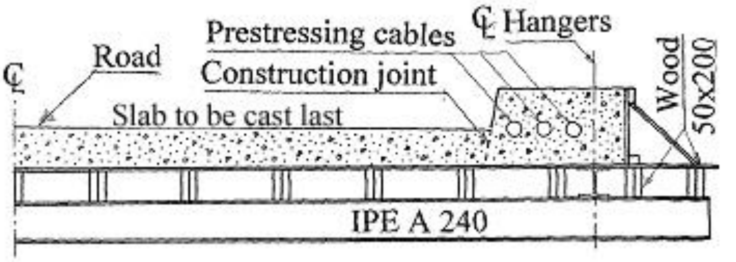

Cross-section of formwork and half the permanent and temporary lower chord. (Camber of the transversal beams is not shown)

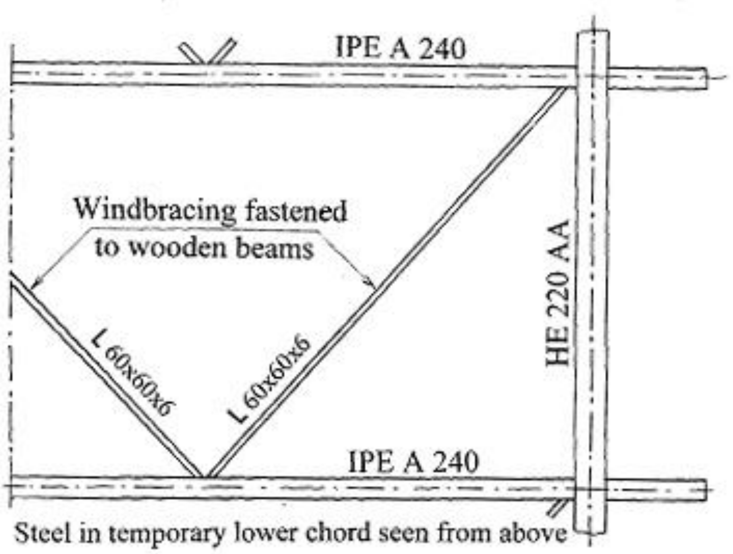

Steel in temporary lower chord seen from above

Fig. 18. Temporary lower chord for erection of a network arch

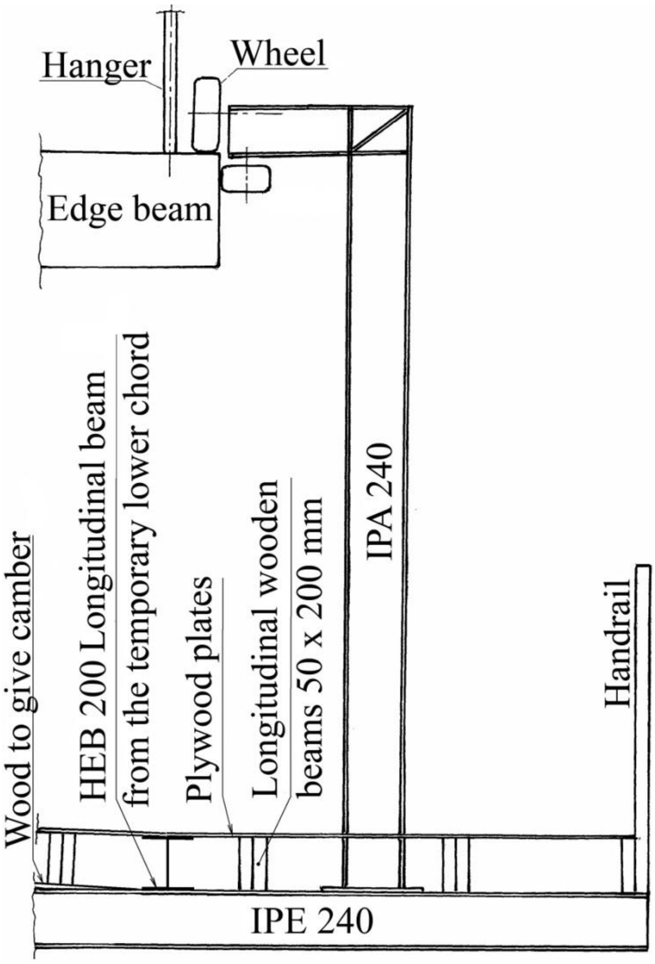

Fig. 19. Wagon for removing the scaffolding and the temporary lower chord

A wagon for removing the wooden form and the temporary lower chord is shown in Fig. 19. The floor in the wagon for removing the form and the temporary lower chord is part of the skeleton in the network arch.
There are two extra long transversed beams in the lower chord. Four vertical beams are fastened to the long beams. On top of each vertical beam two wheels can roll on the edge of the lower chord.
See pp. 52 to 53 a in TNA.

The temporary lower chord does not need much corrosion protection. It can be used again in various bridges. For bridges of various widths, small alterations of temporary lower chords can be made. When there is a certain distance between the two opposite directions of the traffic, two parallel network arches can be used.

In rivers and lakes big floating cranes are seldom available. Then the steel skeleton can be erected on a ramp as indicated in fig. 20. Then a pontoon is assembled on the water and moved to the pillar nearest to the temporary lower chord.

Then one end of the temporary network arch is moved to the middle of the pontoon. Then the pontoon is pulled over to the opposite shore. Then it is moved to the pillars, and the lower chord can be cast.

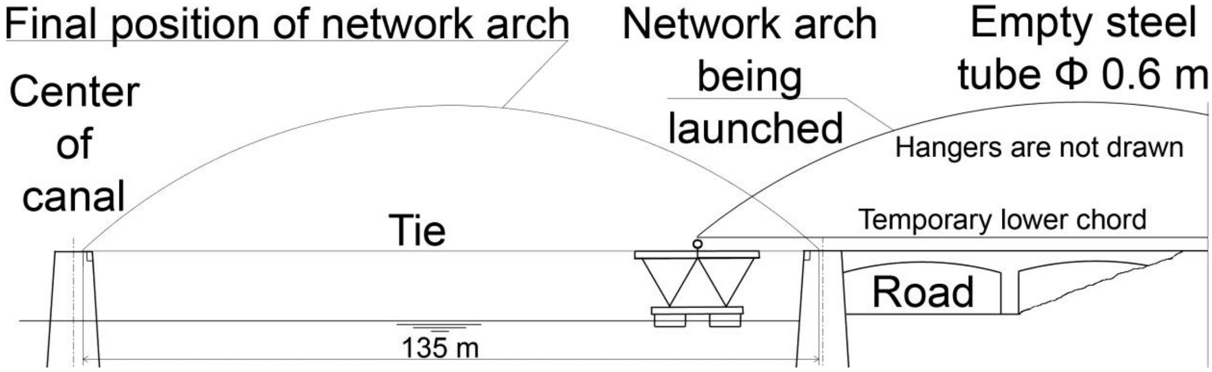

Fig. 20. Erection of a network arch over a river, lake or canal

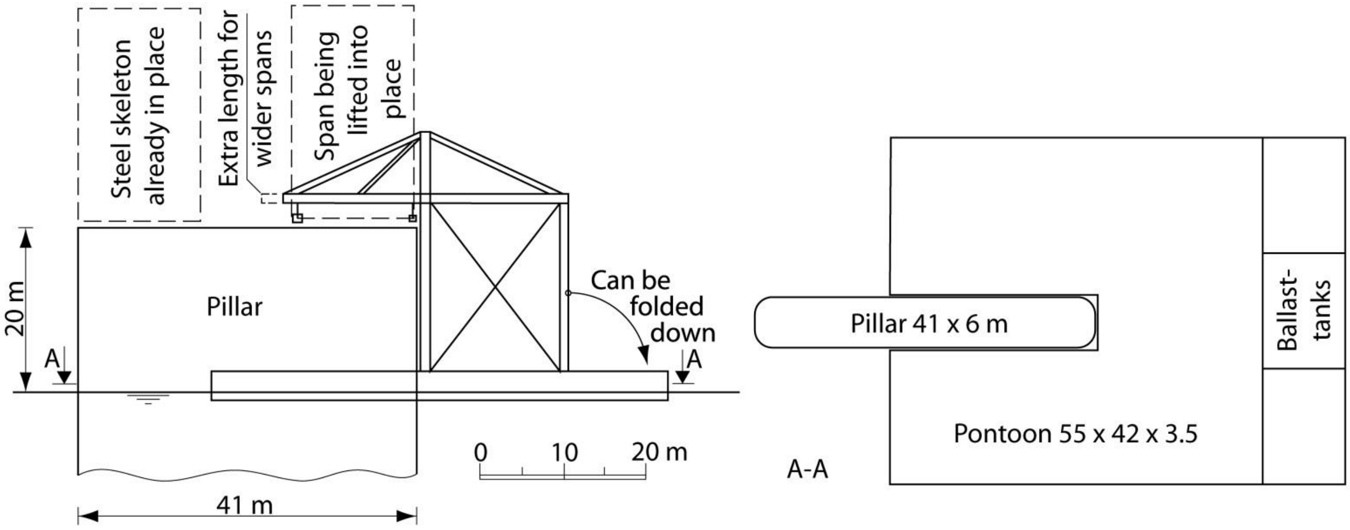

Fig. 21 indicates a method of erection that can be used at the coast, inland lakes and big rivers

At sea or in large rivers, one can employ the erection method mentioned in fig 21. It can be used to lift whole bridges or the steel skeleton into place. The scaffolding in fig. 21 can also be folded down so that it may pass under existing bridges. The pontoon usually requires 1 meter of water under it.

Steel weight for network arches with two lanes.

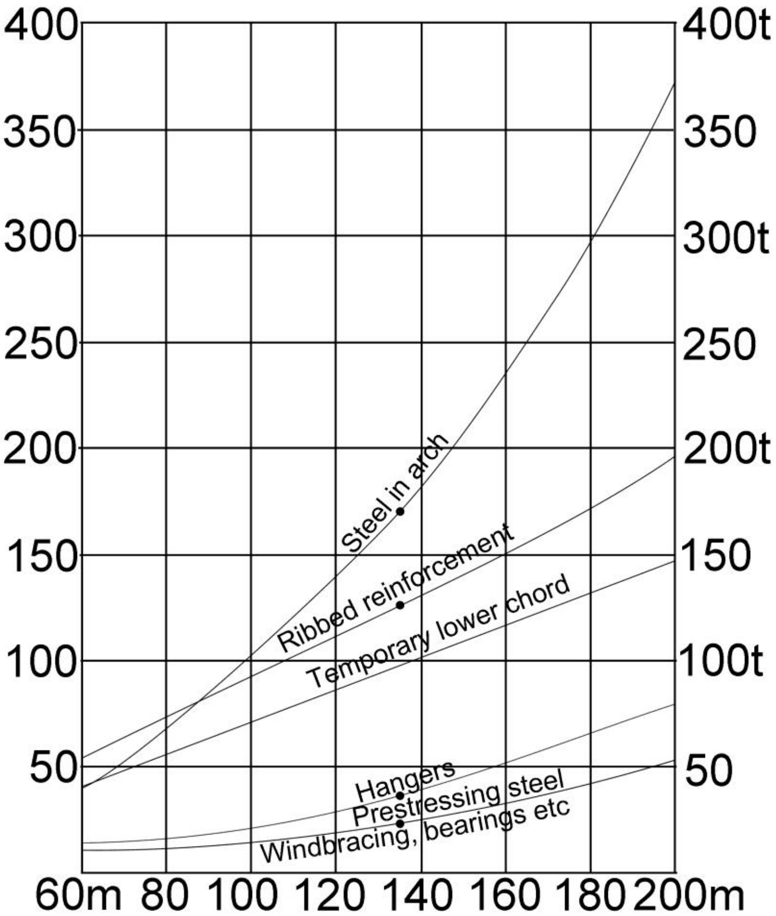

For rough estimates it is practical to have a diagram for the steel weights of road bridges with two lanes. The black points correspond to the steel weights for the Åkvik Sound Bridge. If we increase the rise of the arch from 0.15 times the span to 0.17 times the span, the steel weight will be on the safe side. (Tveit, Systematic Thesis page A-3)

Fig. 22 is a diagram for steel weights for road bridges with two lanes

The Brandanger Bridge is the most slender bridge of its type by a long shot.

Fig. 23 shows the Brandanger Bridge before the railings were erected

Brandanger Bridge, shown in fig. 23, is the world's most slender arch bridge. It opened in 2012 with a span of 220 m. We define the slenderness of the arch bridge as the span divided by the sum of the cross section of the arch and the tie.
Slenderness: 22000mm / (711+400) =198

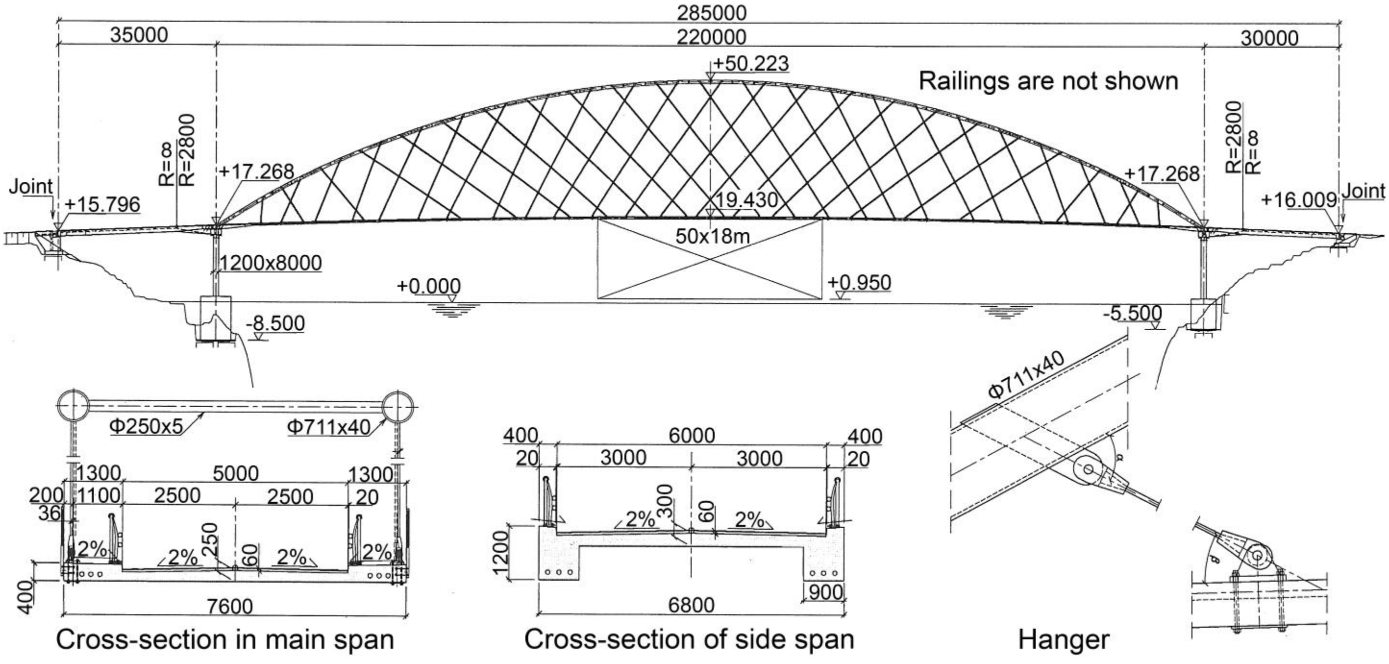

Fig. 24. Drawing of the Brandanger Bridge

The design firm put the hangers in a somewhat irregular fashion, but since the hangers are so thin, that is hardly noticeable.

Fig. 25 A: Building of the main span 5 km from the site *Fig. 25 D&E Transport of the main span to the site*

Fig 25 B&C The main span was moved by two Dutch floating cranes *Fig 25 F: The main span is on the pillars*

The main span had a weight of 1862 t. Over the pillars there is a continuity between the main span and a sidespan. There are vertical prestressing cables down into the pillars.
This makes the building more complicated. Here like anywhere else, the firm Skansa did a good job. Later Professor Phillip Van Bogaert from Ghent in Belgium showed that the tie continuity was not needed.

The thickness of the plate is 210 mm. Here Adolf Pucher's Influence Surfaces of Elastic Plates (1977) has been used. In fig. 24, the same thickness is 300 mm.

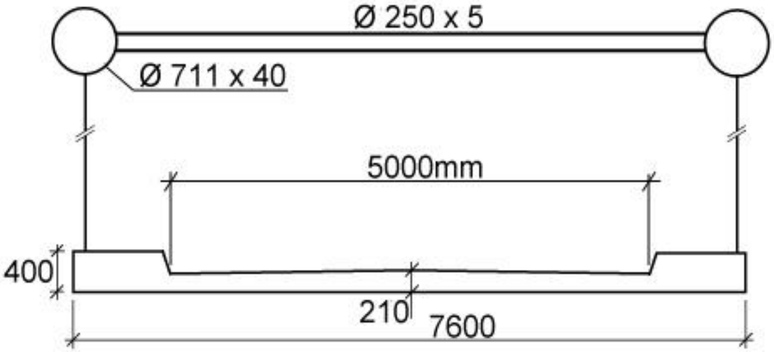

Fig. 26 Cross-section of the Brandanger Bridge

We will now look at network arches built abroad.

New Zealand:

Fig. 27. The Mangamahu Bridge in New Zealand was opened in 2008. Span of 85 m.

The picture in Fig. 27 was taken a year after the author visited New Zealand. The unfinished lower chord is divided in two parts. The red cranes are each lifting one half of the arch. The yellow crane carries a basket for the two men who will join the arch at the top. The bridge was the slimmest arch bridge in the world from 2008 to 2010. The bridge got a gold medal from an engineering soceity in New Zealand. Chan, M. & Romanes, M. (2008) “New Zealand`s First Network Arch Bridge”. Conference paper, the 4th New Zealand`s industry Conference hosted by HERA in October 2008.

Fig. 28. Waikato River Bridge was opened in New Zealand in 2011. Span 100 m.

On the one side of the bridge there were two pipes with steam. The arches are filled with concrete. The weight of the steel used in the construction was 180 kg/m^2 inside the railings.

Providence Bridge in Rhode Island USA.

Fig. 29. The network arch in Providence, Rhode Island, USA. Opened 2007. Span of 122 m.

Fig. 30. The main span in the Providence network arch was assembled 19 km from the site

The bridge has three arches and five lanes in each direction. The hangers have a 60° angle towards the lower chord. There is a hanger at the end of each beam.

The switch from vertical to crossing hangers reduced the deflection to about a tenth. Tidal force helped in the construction.

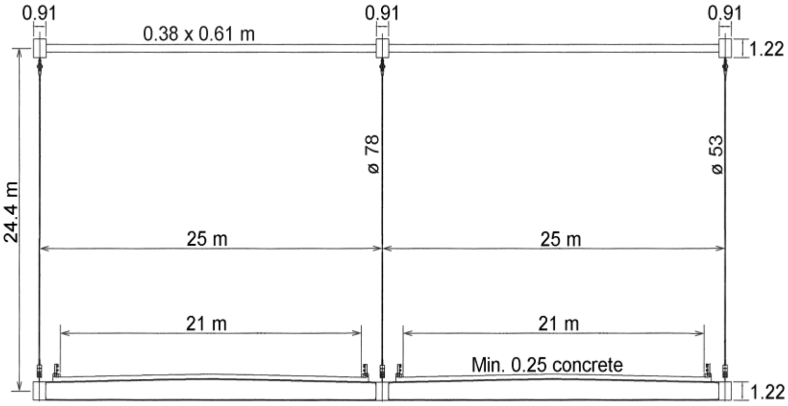

Fig. 31. Cross section of the network arch. Width 51 m.

The bridge got the AASHTO America`s Transportation Award for Large Project – Innovative Management for the big float.
Steere (2008), Nakai (1995), Fisher (1984) and the Manual on use of self propelled modular transporters to remove and replace bridges, FHWA-HIF-07-022, June 2007

Netowrk arch over the Ohio river, USA.

Fig. 32 Blennerhassett Bridge over the Ohio River was opened in 2008. Span 267.8 m.

This is the longest network arch in the world. It has three lanes in each direction. See fig. 33. The river had to be open for boat traffic at all times. This influenced the method for erecting the bridge. See fig. 34. If the bridge had vertical hangers, the deflection would have been nearly 11 times as big. The deflection in the arch would have been 4 times as big, and the bending in the lower chord would have been 5 times as big.

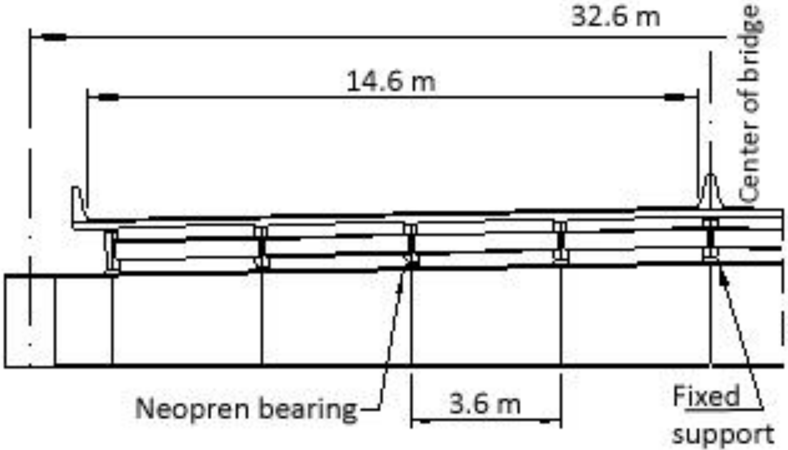

Fig. 33 Beam in the lower chord

The rise of the arch divided by the span is 53.3/267.8=0.2.

The distance between the transversial beams is 1.9 m.

There are two hangers at the end of each transversal beam. The angle between the tie and the hangers is 63.3°.

The bridge is a robust construction able to withstand a couple of hangers failing. Hangers that are near each other in the tie are far from each other at the arch.

The bridge won an award from The Steel Bridge Alliance in 2009.

Wollman et al. (2005)

Wollman (2007)

Wollmann & Zoli (2008)

Systematic Thesis pp. 23-25

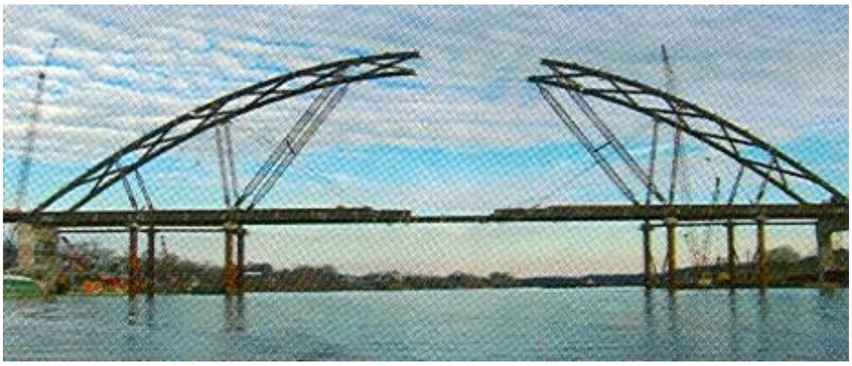

Fig. 34. Erection of the Blennerhassett Bridge

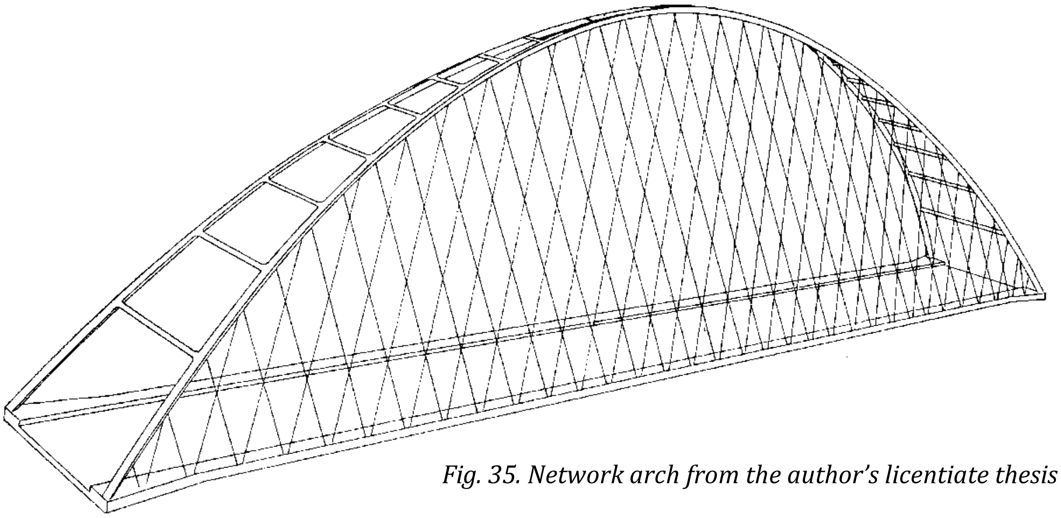

Fig. 35. Network arch from the author's licentiate thesis in(1959)

Network arch in Fehmarnsund, North Germany.

Fig. 36. Network arch over the Fehmarnsund. Opened 1963. Span 248 m. (Stein (1951),(Stein & Wild 1965)

The bridge was built by Gutehoffnungshütte. The author`s professor, Phillip Stein from Aachen wrote the 100 year history for that firm. Therefore the author has assumed that the idea of crossing hangers came from his work in Aachen in 1956. The Fehmarn Bridge is more complicated than anything the author could have designed in 1963. Via Professor Masao Naruoka (1955) the network arches came to Japan. There the bridge type has become very popular.

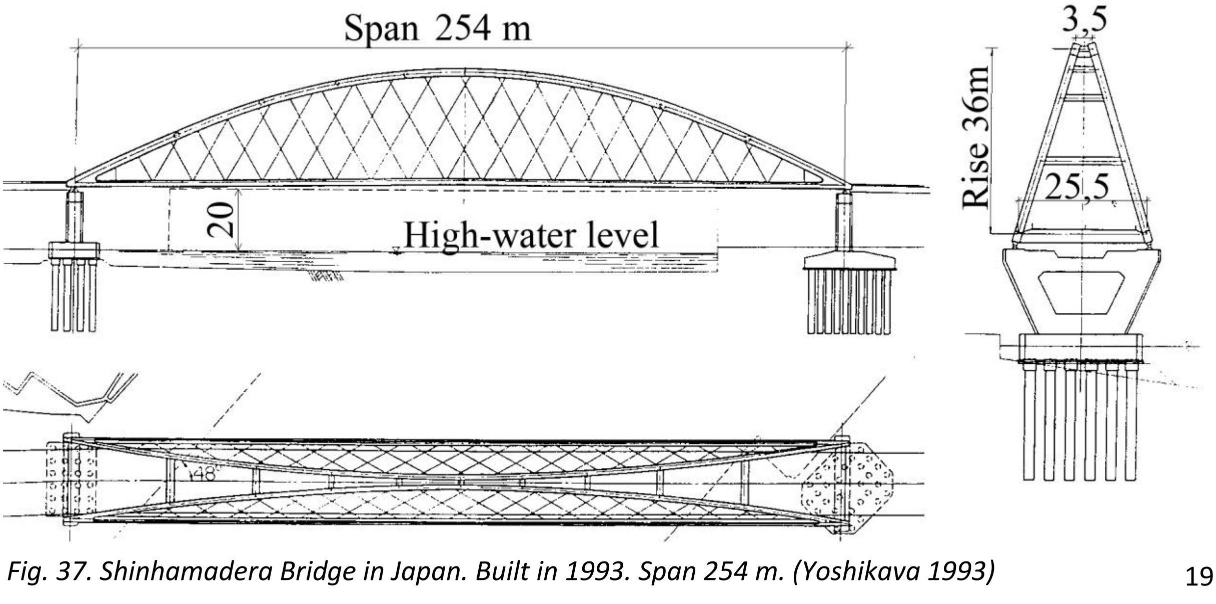

Fig. 37. Shinhamadera Bridge in Japan. Built in 1993. Span 254 m. (Yoshikava 1993)

Loftesnes Bridge

The Loftesnes Bridge is to be built in Sogndal on the north side of Norway`s longest fjord. The author wants to show how a network arch could be used for the Loftesnes bridge. Methods of erection will be stressed. A competing alternative has been made by Selberg and Reinertsen.
Knut Selberg is an architect. Earlier he was a professor at the Technical University in Trondheim.
It seems that the strut frame bridge needs twice as much material as a network arch. The erection of the strut frame would cost much more than the erection of the network arch indicated on the next page.

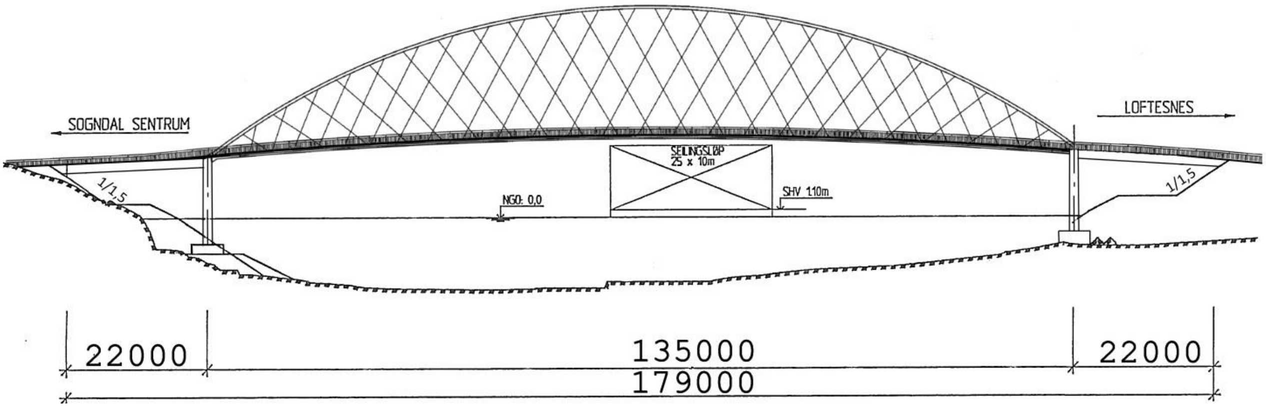

Network Arch

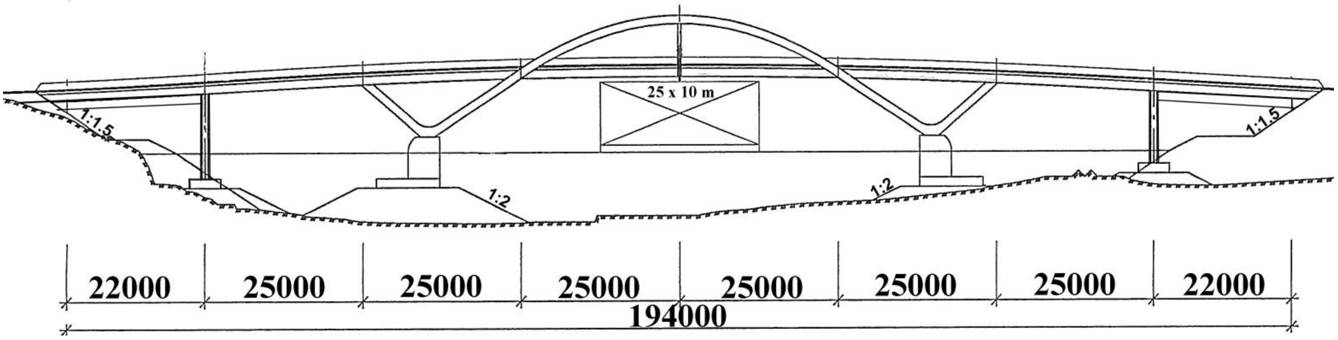

Strut frame

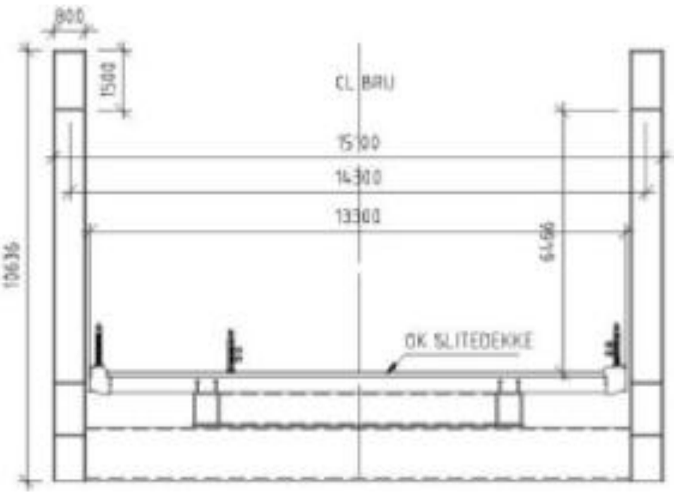

Cross section of the Strut Frame

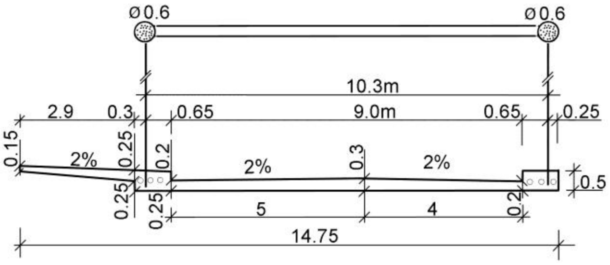

Cross section of the network arch

Fig. 38 shows two alternatives for the Loftesnes Bridge

Erection of the Loftesnes Bridge.

Assuming that the main span is a network arch spanning 135 m, the total weight would be about 1800 t. As in the Brandanger Bridge it is probably best to build a steel skeleton that is lifted onto the pillars.

Here is a rough estimate of the steel skeleton that can be lifted to the pillars. We assumed that the arches can be filled with concrete after the bridge is on the pillars.

Min. weight to be lifted	~ 250 t
Weight if the reinforcement under the prestressing cables is put in	~ 500 t
Weight with transverse beams put in at the end of span	~ 540 t

Lifting capacity of Norwegian floating cranes:

Uglen	600 t
Eide Marine Services	400 t
Ulstein’s mobil crane	315 t

It is perhaps best to employ two cranes when the unfinished bridge is to be moved to the site. That’s why multiple cranes might be employed.

Uglen can lift the steel skeleton even if the two transverse beams at the end of the lane are cast.
Eide Marine Service`s crane can lift the steel skeleton if the scaffolding and the reinforcements are put in place after the skeleton has been transported.
The numbers under the heading are less reliable than the rest of the numbers in the rest of this thesis, but they illustrate valuable ideas.

Network arches made of concrete on land and then lifted onto the pillars by large floating cranes.

In network arches, pressure is a dominant factor. It is best to take the stress in the lower chord by means of prestressing cables. For long bridges, arches made of concrete can be assembled on land and lifted onto the pillars by means of large floating cranes. There is more on how this can be done in Tveit (2010)

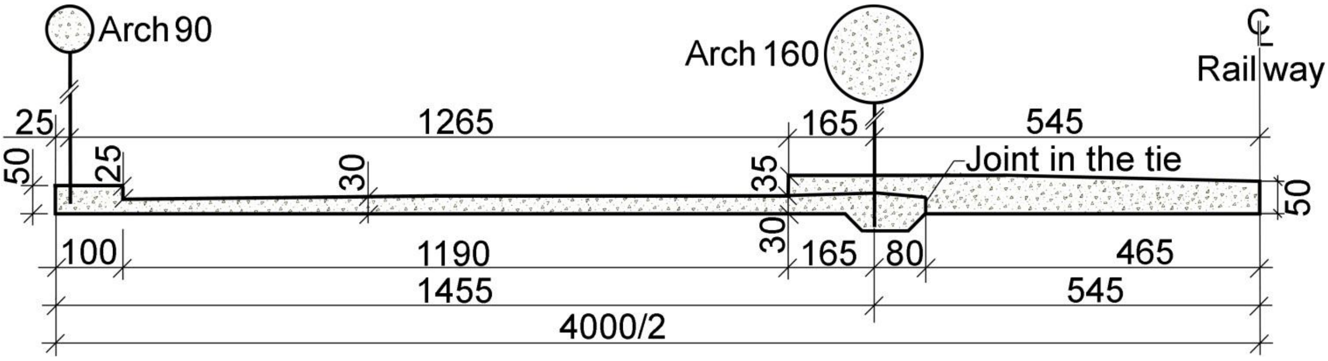

Fig. 39. Every side span is 235 m long (Tveit 2009)

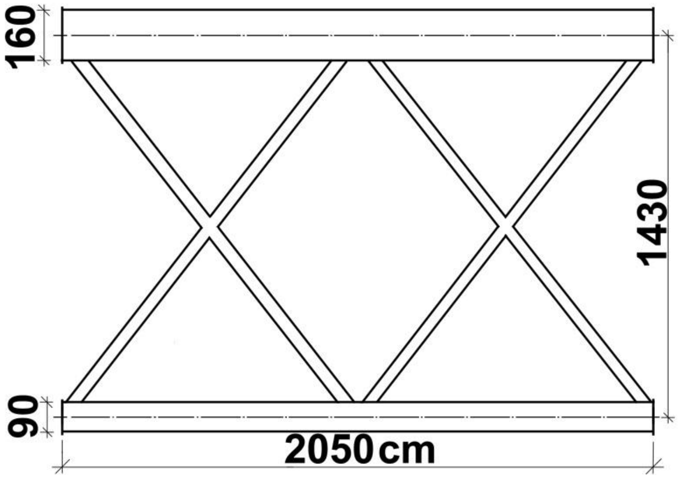

When the arch is round, it will always buckle sideways because the hangers are a stiffer sideways support than the windbracing Thus the arch will always buckle sideways. This simplifies the calculation of the buckling of the arch.

Fig. 40. Prefabricated part of the arch seen from above

Temporary Network Arches between 60 and 105m long. Assembled from parts and components 15 to 20 meters long.

In a conversation in 2009 with Ted Zoli in HNTB in New York, he told the author that the Bailey bridges from the second world war could be used for spans up to 60m. We agreed that network arches could be assembled from standard components, and that they could make up spans that are twice as long.

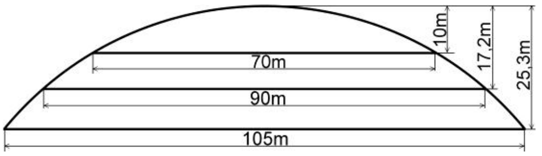

Fig. 41. Three spans assembled *from standard components*

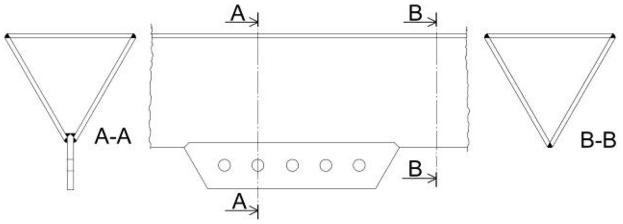

Fig. 42. Cross section of the arches

Fig. 41 indicates three spans that can be made by employing standard components. Only the length of hangers and nodal points between arch and the ties are different. The arch has a radius of curvature of 67.5 m. Still, an evenly distributed load gives 12% less axial force in the 105 m span. Still, the buckling load is lower in the longest span. The road system influences the length of the standard components.

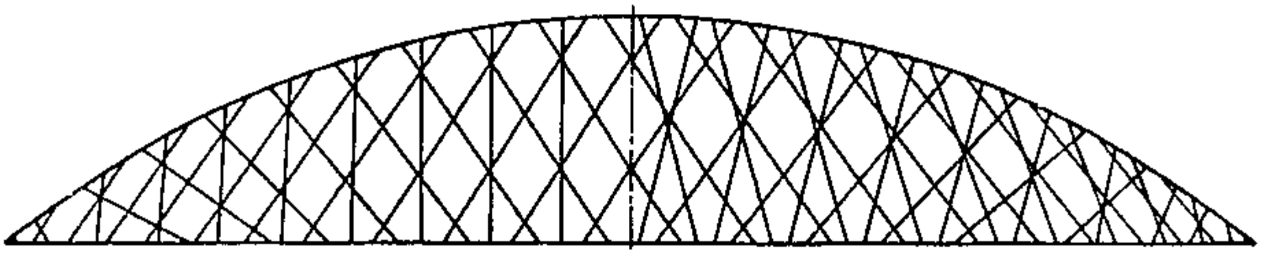

Fig. 43. Network arch with three and four sets of hangers

Since the temporary lower chord will be light when compared to the traffic loads, it might be best to employ three or four sets of hangers.

Network Arch Railway Bridges

A comparison between network arches and arch bridges with vertical hangers

The diagram in fig. 44 was made by Professor Dr. Frank Schanack in Chile. Network arches make good railway bridges, since they are very stiff, in particular when one considers the amount of steel they require.

There is also a need for further investigation into network arches for high speed railways and network arches that suffer multiple hanger failures.

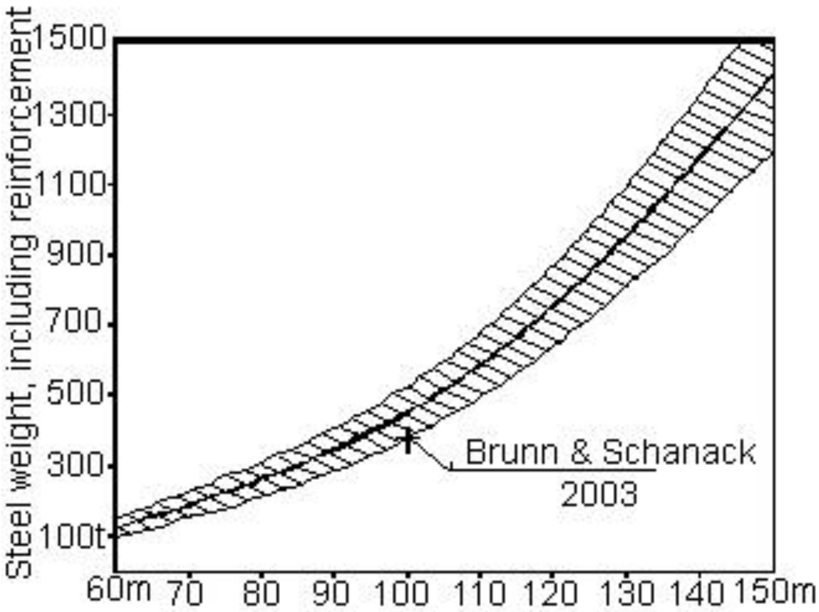

Fig. 44. Diagram of steel weights in a railway bridge with two tracks

In a German publication on railway bridge (Schlaich et al.) it says:

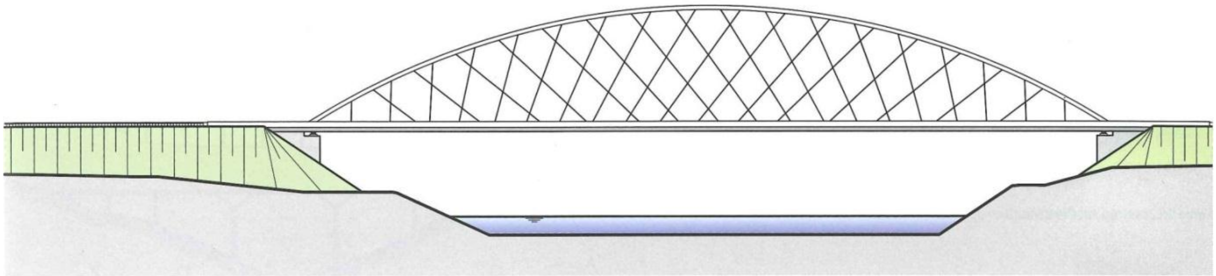

Fig. 45. Network arches for railway bridges. (Translated to the best of the author's ability.)
Especially in big spans, the network arch is a very economical alternative compared to arches with vertical hangers. The crossing of hangers leads to extremely slender structures. In spite of the reduced dead load, a well-designed network arch has load carrying capacity and resistance against fatigue like a bridge with vertical hangers.

The network arch has great advantages, because of less deflection and less variation in the end tangent. The network arch has smaller vibrations due to traffic loads. Because of the great stiffness, the network arch can be used for high speed railways.

Where there are vibrations due to traffic loads and vibrations due to wind and rain, the network arch has advantages. This is because the hangers can be tied to each other, where they cross each other. This increases the dampening. [Tveit, P. Introduction to the network arch.]

In spite of its filigree construction, the robustness of a network arch is at least equal to the robustness of an arch with vertical hangers. The breaking of one or more hangers due to collision with traffic is better compensated for in the network arch than in arches with vertical hangers.

It is rare that slender lower chords of network arches come over the top of the rail. This has a favorable simplifying effect on the footpaths and the traffic safety. When the footpath is outside the hangers, one must see to it that there are good openings in the hangers between the footpath and the rails.
When it comes to upkeep, renewing the corrosion protection is very important. Corrosion protection becomes more costly because the network arch has more hangers and a longer length. But the network arch has thinner chords and much thinner hangers. Thus the corrosion protection will cost about the same for the two bridge types. The corrosion protection costs much less if the lower chord is made of concrete with a low level of pre stress. The classic orthotropic steel plate needs more corrosion protection. When planning the network arch, one must stress optimal geometric form of the hanger net, and see to it that all parts of the structure have good resistance towards fatigue. (End of translation)

In fig. 46 there are a network arch and an arch bridge with vertical hangers.
For loads on half of the spans of bridges, the maximum bending moment in the network arch is only 5% of the corresponding bending moment in the bridge with vertical hangers. For the network arch it is an advantage that the negative bending moment is much smaller than the positive bending moment. In the bridge with vertical hangers, positive and negative bending are equally great.

In fig 45, there is a gradual reduction of the angle between the hangers and the lower chord. See fig 13. We get the biggest reduction in the bending moment when the angle between the lower chord and hangers is 53°. Then the bending moment in the lower chord is only 6% of the bending moment that we had when the hangers were vertical.
There is more about the relaxation of hangers in TNA pp. 67 and 68.

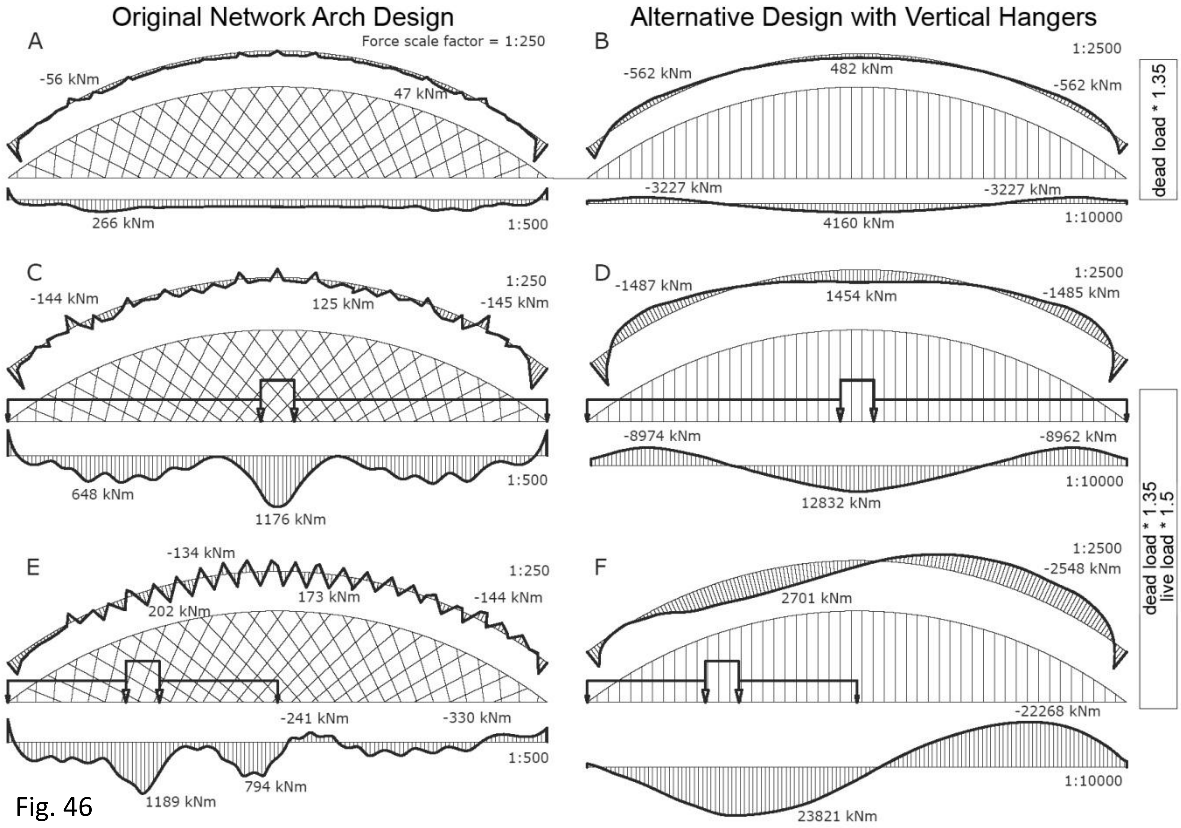
Original Network Arch Design
Alternative Design with Vertical Hangers
A
Force scale factor = 1:250
-56 kNm
47 kNm
266 kNm
1:500
B
1:2500
-562 kNm
482 kNm
-562 kNm
-3227 kNm
-3227 kNm
4160 kNm
1:10000
dead load * 1.35
C
1:250
-144 kNm
125 kNm
-145 kNm
648 kNm
1176 kNm
1:500
D
1:2500
-1487 kNm
1454 kNm
-1485 kNm
-8974 kNm
-8962 kNm
12832 kNm
1:10000
dead load * 1.35
live load * 1.5
E
-134 kNm
1:250
202 kNm
173 kNm
-144 kNm
-241 kNm
-330 kNm
1:500
1189 kNm
794 kNm
F
1:2500
-2548 kNm
2701 kNm
-22268 kNm
1:10000
23821 kNm

Fig. 46

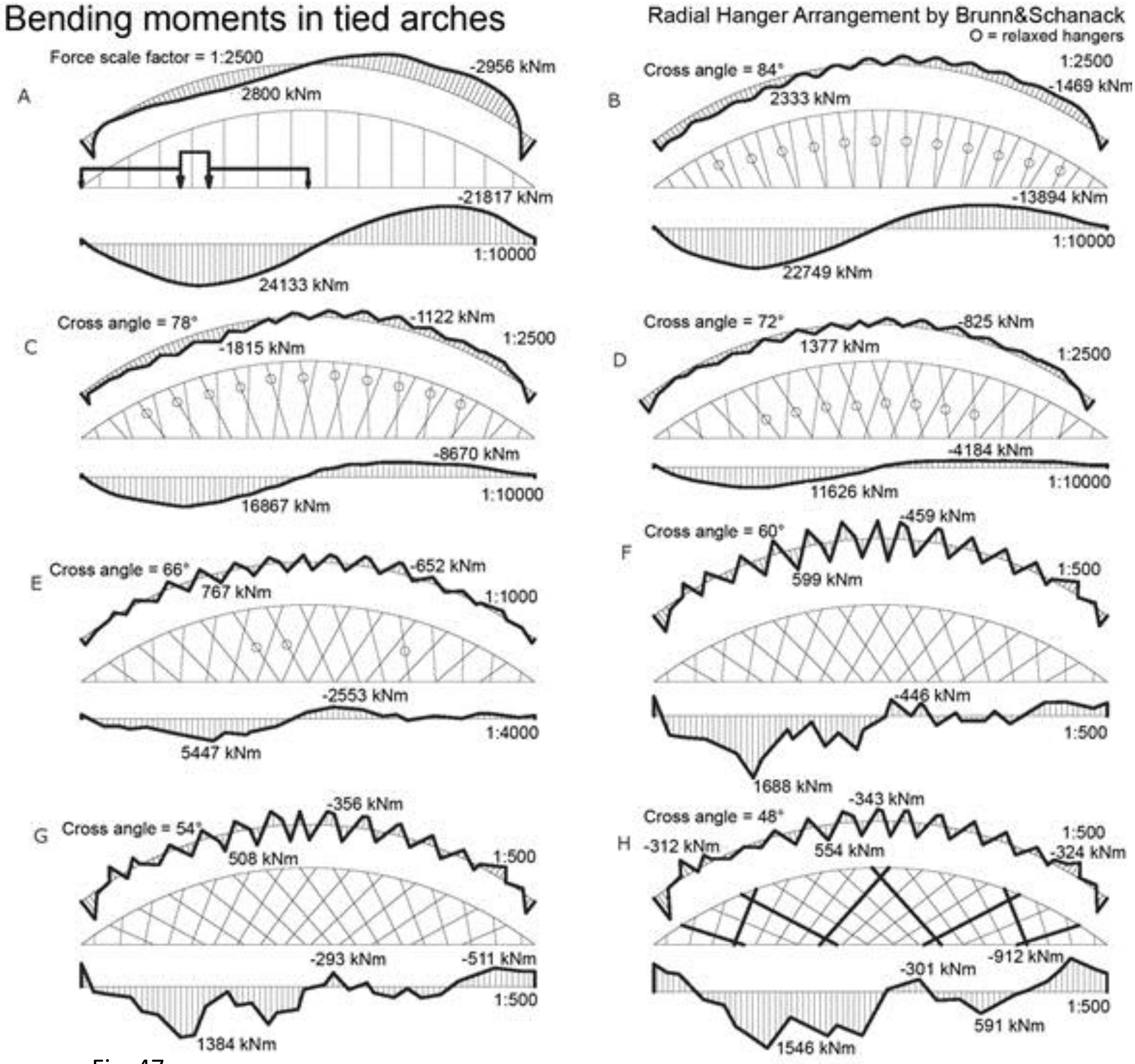
Bending moments in tied arches
Force scale factor = 1:2500
Radial Hanger Arrangement by Brunn&Schanack
O = relaxed hangers
A
2800 kNm
-2956 kNm
-21817 kNm
1:10000
24133 kNm
B
Cross angle = 84°
1:2500
2333 kNm
-1469 kNm
-13894 kNm
1:10000
22749 kNm
C
Cross angle = 78°
-1122 kNm
-1815 kNm
1:2500
-8670 kNm
1:10000
16867 kNm
D
Cross angle = 72°
-825 kNm
1377 kNm
1:2500
-4184 kNm
1:10000
11626 kNm
E
Cross angle = 66°
-652 kNm
767 kNm
1:1000
-2553 kNm
1:4000
5447 kNm
F
Cross angle = 60°
-459 kNm
599 kNm
1:500
-446 kNm
1:500
1688 kNm
G
Cross angle = 54°
-356 kNm
508 kNm
1:500
-293 kNm
-511 kNm
1:500
1384 kNm
H
Cross angle = 48°
-343 kNm
-312 kNm
554 kNm
1:500
-324 kNm
-912 kNm
-301 kNm
1:500
591 kNm
1546 kNm

Fig. 47

Good news from the USA.

In the USA they seem to have been building many network arches lately.
If a planned bridge turns out to be more costly than expected, they try to find a design much less costly.
This has led to the introduction of network arches in two cases that I know about. But there might be more.

The fifth of October this year (2012), the 19th yearly “Bridge design workshop” took place at the Kansas State University in the USA.
Around half the lectures were on network arches.
The author has never experienced anything like it. It fills him with joy on his 82nd birthday, when he stands at the end of his scientific career.

Conclusions after 57 years

A well designed network arch is likely to remain the world’s most slender tied arch bridge.

The slim chords are pleasing to the eye and do not hide the landscape or cityscape behind them.

The slim tie is an advantage when the traffic on the bridge is lifted up to let other traffic pass under it.

Lightness and vertical reactions give savings in the substructure.

If the bridge has 15 m between the planes of the arches, the tie can be a simple concrete slab.

Then the concrete ties should have small edge beams with room for the longitudinal prestressing cables.

If the span of this slab is more than 10 m, transversal prestressing should be considered.

Network arches have very small longitudinal bending moments in the chords.

All members efficiently carry forces that can not be avoided in any simply supported beam.

Tie and hangers give the arch good support and high buckling strength in the plane of the arch.

H-beams with horizontal webs have a favourable distribution of stiffness and give simple details.

Tension is predominant in tie and hangers. All hangers can have nearly the same cross-section.

Network arches are equally well suited for road and rail bridges.

Erection can be done using a temporary lower chord which combined with the structural steel has enough strength and stiffness to carry the casting of the concrete tie.

Other efficient methods of erection are available.

Network arches are not sensitive to uneven settlements in the foundations.

High strength and low weight give the network arch good resistance to earthquakes.

Most concrete parts need more maintenance than a concrete slab with a slight prestress.

Network arches have small surfaces. Thus they need little corrosion protection.

Network arches uses very little steel. High strength steels are well utilised.

If things go well, the network arch can save up to 40 % of the cost and 70 % of the structural steel.

Since network arches need little steel, a high percentage of the cost will be labour.

Since the advantages of the network arch are so great, there is no need to exaggerate.

If the network arch had been a well known type of bridge, it would have been hard to argue convincingly for arch bridges with vertical hangers and many other bridge types.

Conservatism and lack of time are important obstacles to the building of network arches.

List of literature.

Brunn, B. and Schanack, F. (2003) “Calculation of a double track railway network arch bridge applying the European standards“ Graduation thesis at TU-Dresden. August 2003. 320 pages. A revised version of this thesis can be found at http://home.uia.no/pert under the button “Master’s Theses”.

Chan M. and Romanes M. (2008) “New Zealand’s First Network Arch Bridge” Conference paper for the 4th New Zealand Metal Industry Conference, hosted by HERA in October 2008. All conference papers were published ona CD.

Fiedler, E. and Ziemann, J. (1997), “Die Bogenbrücke über die Saale bei Calbe – eine Brücke mit besonderer Bogenform”, (The Arch Bridge over the Saale River at Calbe – a Bridge with an Unusual Arch Shape. In German), Stahlbau, Vol. 66, No. 5, 1997, pp. 263-270, Dokumentation 1997, pp. 329-337, ISBN 3-927535-04-4.

Fisher, John W. Fatigue and Fracture in Steel Bridges. Case Studies, Wiley, New York, 1984.

Herzog, Max. (1975). “Stahlgewichte moderner Eisenbahn- und Straβenbrücken.” (Steel Weights of Modern Rail and Road Bridges.) Der Stahlbau 9/1975. pp. 280-282.

Leonhardt, (1991) “Developing guidelines for aesthetic design.” *Bridge aesthetics around the world*, M. P. Burke Jr. et al.,eds., Nat. Res. Counsil, Washington, D.C. pp. 32-57.

Nakai, H. et al. (1995) “Proposition of Methods for Checking the Ultimate Strength of Arch Ribs in Steel Nielsen-Lohse Bridges.” Stahlbau 64 (1995) Heft 5, pp.129-137.

Nielsen, O. F. (1929) “Foranderlige Systemer med anvendelse på buer med skraatstillede Hængestenger.” (“Discontinuous systems used on arches with inclined hangers”, in Danish.) 121 pages. Gad Copenhagen. Ph.D. thesis.

Nielsen, O.F. (1932) “Bogenträger mit Schräg gestelten Hängestangen.” (“Arches with inclined hangers,” in German.) Internationale Vereiningung f. Brückenbau und Hochbau. Abhandlungen 1, 1932. pp. 355-363.

Pucher, A. (1977) “Influence Surfaces of Elastic Plates”. Springer-Verlag, Wien. 1977

Räck, M. (2003) “Entwurf einer kombinierten Straßen-Eisenbahn-Netzwerkbogen-brücke“ (Draft of a Network Arch for a Combined Road and Railway Bridge) Graduation thesis at TU-Dresden. August 2003. 237 pages. A revised version of this thesis can be found at http://home.uia.no/pert under the button “Masters Theses”.

Schanack, F. and Brunn, B. (2009) „Analysis of the structural performance of network arch bridges.“ The Indian Concrete Journal. January 2009. pp. 7-13.

Schlaich J., Fackler T., Weißbach M., Schmitt V., Ommert C., Marx S., Krontal L. (2008) “Leitfaden Gestalten von Eisenbahnbrücken” Fischer Druck GMBH, Peine

Selberg, A. (1972) Stålkonstruksjoner 1972. Tapir Trykk. ISBN 8251900050

Steere, P. and Yihui, Wu. (2008). “Design and Construction of the Providence River Bridge” Official Proceedings of the 25th Annual International Bridge Conference, June 2-4, 2008.

Teich, S. and Wendelin, S. (2001) „Vergleichsrechnung einer Netzwerkbogenbrücke unter Einsats des Europäishen Normenkonsepts.“ (In German). Graduation thesis at TU-Dresden.

August 2001. 300 pages. A revised version of this thesis can be found at http://home.uia.no/pert under the button "Master's Theses".

Tveit, P. (1959) "Bogebruer med skrå krysstilte hengestenger." ("Arch bridges with inclined intersecting hangers," in Norwegian.) Ph.D. thesis presented at the Tech. Univ. of Norway. 64 pages, 78 drawings.

Tveit, P. (1964) "Nettverkbogar, ein ny brutype". ("Network Arches, a New Type of Bridge.) Bygg, Vol. 12, May 1964, pp.105-113.

Tveit, P. (2007) "Visit to the Steinkjer network arch 44 years later". ARCH'07, 5th International Conference on Arch Bridges. Madeira, 12-14 September 2007. pp. 305-314, © University of Minho. Portugal. ISBN: 978-972-8692-31-5

Tveit, P. (2009a) "Efficient Utilisation of Optimal Network Arches". Proceedings of the fifth Symposium on Strait Crossings, Trondheim, Norway June 21-24, 2009. ISBN 978-82-92506-69-1 pp. 509-514.

Tveit, P. (2009b) "Genesis and Development of the Network Arch Concept" NSBA World steel Bridge Symposium. San Antonio, Texas. November 17-20, 2009.

Tveit, P. (2009c) " A Systematic Thesis on Network Arches" . Same home page as above.

Tveit, P. (2009d) "India Needs Network Arches". Civil Engineering & Construction Review. August 2009. pp. 50-60

Tveit, P. (2009c) " A Systematic Thesis on Network Arches" . " In the home page http://home.uia.no/pert under the button Systematic Thesis

Tveit, P. (2010) "Optimal Network Arches For Road and Rail Bridges" Proceedings of the 6th International Conference on Arch Bridges. Fuzhou, Fujian, China. October 11-13, 2010. pp. 271-278. ISBN 978-953-7621-10-0.

Tveit, P. (2011) "Further development of network arches" IABSE-IASS, London Symposium Report. Page 468. ISBN 978-0-7079-7122-3

Yoshikava, O. et al. (1993) "Construction of the Shinamadera Bridge" Stahlbau 63 (1993), Heft 5, pp.125-136.

Wollmann, G. and Zoli, T. (2008) "Bridge Across Ohio River and Blennerhassett Island" Structural Engineering International 1/2008., Number 1, February 2008. pp. 28-30.

Wollmann, G., Zoli, T. and Shook, J. (2005) "Design of Tied Arch Bridge Across Ohio River and Blennerhassett Island" Proceedings, 22nd Annual International Bridge Conference, Pittsburgh, PA, June 13-15.

Wollmann G, et al. (2007) "Construction of Tied Arch Bridge Across Ohio River and Blennerhassett Island" Proceedings, 24th Annual International Bridge Conference, Pitsburgh, Pennsylvania, June 4-6

Zoli, T. and Woodward, R. (2005) "Design of Long Span Bridges for Cable Loss." IABSE Symposium, Structures and Extreme Events, September 14-17, Lisbon, Portugal.

An extensive list of literature can be found at the end of "The Network Arch"(2011)