The Network Arch.

Bits of Manuscript in March 2014 after Lectures in 50+ Countries

Summary

This publication contains advice on how to design network arches. In the future, revised editions of this publication can be found at http://home.uia.no/pert

Optimal network arches are arch bridges where some hangers cross other hangers at least twice. When the arches are less than 15 m apart they normally cost less if the tie is a concrete slab and the arches are steel tubes or universal columns or American wide flange beams. Network arches are best suited for spans between 80 m and 170 m, but will compete well in a wider range of spans. This results in attractive bridges that do not hide the landscape behind them. A network arch bridge is likely to remain the world's most slender arch bridge.

The transverse bending in the slab is usually much greater than the longitudinal bending. Thus the main purpose of the edge beam is to accommodate the hanger forces and the longitudinal prestressing cables. The partial prestress reduces the cracks in the tie. This is part of the reason why the first two Norwegian network arches are still in good shape after over 50 years.

For load cases that relax none or only very few hangers, network arches act very much like many trusses on top of one another. They have little bending in the tie and the arches. To avoid extensive relaxation of hangers, the hangers should not be inclined too steeply. Small inclination of hangers tends to increase the bending moments due to concentrated loads. A compromise should be sought. All hangers might have the same cross-section and nearly the same decisive load. When there are no transversal beams in the tie, upper nodes should normally be placed equidistantly along the arch.

The network arch can be seen as a beam with a compression and a tension zone. An increased rise in the arch will give smaller axial forces in the chords and lower steel weights. It is mainly aesthetic considerations that limit the rise of the arches. Most of the shear force is taken by the vertical component of the arch force. The hangers act like a light web. They take some of the variation in the shear force.

Because there is little slenderness between the nodal points of the arch, and tension is predominant in the rest of the network arch, this type of bridge makes good use of high strength steel. All members in an optimal network arch efficiently carry forces that can not be avoided in any simply supported beam. Network arches are very stiff. This is very important when the network arch is used for railway bridges, especially in bridges for high speed railways.

Compared with conventional bridges, the network arch, where the tie is a concrete slab, usually saves over ⅔ of the steel weight. See fig. 98, p. 93. The details are simple and highly repetitive. Thus the cost per tonne is not very high. The slender tie leads to short ramps. This makes it simpler to attach roads at the ends of the bridge.

The network arch on page 93c is a most competitive network arch. The details are simple and the exposed surface is small. The steel weight is low, but not minimal. The arch and hangers supplemented by a light temporary lower chord can be moved when lifted near the ends. This steel skeleton can be erected on side-spans or on ice between the abutments. It can also be lifted in place by floating cranes. When the span is in place, this steel skeleton has enough strength and stiffness to support the concrete tie while it is being cast.

For wide bridges, three or four parallel arches could be used to keep down the span of the concrete slab between the arches, see figs 30 to 32. For long bridges, where many spans are needed, the network arches could be made exclusively from prestressed high strength concrete. The spans should be cast on shore before being floated to the site on pontoons or by big floating cranes. See pp. 47-50, 94-94a.

The local conditions will influence the type of erection. See pp. 15, 19a and 20. Sometimes the tie can be cast on a timber structure. After the arch and hangers have been erected the hangers can be tensioned till they carry the tie. See pp. 6b and 7a. Finished network arches spanning 200 m or more can be moved to the pillars by means of pontoons or big floating cranes. This is more likely to take place in coastal areas. See pp. 93c-94a.

The fact that the optimal network arch uses so little materials makes it environmentally friendly in a broader sense. Unemployment is a problem in most countries. A high percentage of the cost of network arches is wages. Thus network arches would lead to more bridges, more employment and more practical training of the workforce from the same limited funds.

The building of optimal network arches can bring great savings. However steel firms are usually not interested in using very little steel. Considering the great poverty in the world, it would be morally wrong not to use network arches at suitable sites. The introduction of the network arch would create extra work for bridge authorities, but it is up to them to promote it. General conservatism is probably the main obstacle to the use of this very promising structure. To some civil engineers the author's claims may seem exaggerated, but it would be stupid to exaggerate when the bare facts seem like an exaggeration.

Key words: Network arches, arch bridges, road bridges, railway bridges, steel weight, light bridges, erection, economy.

CONTENTS Page

PREAMBLE TO THE INTERNET EDITION February 2011

In 1955 the author considered patenting the network arch. He then visited the German patent office in Munich. There he found an expired patent for a cable-stayed bridge. He understood that the cable-stayed bridge was stiffer and carried the forces more directly than the suspension bridge. On second thoughts he reckoned that conservatism and problems of erection would stop the bridge from being built. History has proved him wrong.

Many engineers who have read about the network arch bridge might have reached a similar conclusion. This is easy to understand because the network arch is much more complicated than the cable-stayed bridge. On the other hand, advances in computer technology have made it easier to calculate the network arch. The two Norwegian network arches were built because they were cheaper than competing alternatives. If the arches are universal columns, the network arches will be even more economical. Nevertheless conservatism and lack of experience with this structure will work against the network arch. This is natural. The author is conservative about most things that he has not considered carefully.

In February and March of 2000 the author made a lecture tour of 12 European countries to talk about network arches. See page 102. It was a great pleasure to give 21 lectures, at which the average number of listeners was over 35. A list containing most of the organisers of the lectures is found on page 99 of this manuscript. The author would like to express his sincere thanks to Professor Dr. Günter Ramberger of TU-Wien for recommending the lecture to all his colleagues. This was done on the strength of (Tveit 92).

This publication, “The Network Arch”, is available on the author’s home page http://home uia.no/pert because this saves time and makes updating easy. More literature on network arches can also be found on the author’s homepage. IABSE asked the author to give the lecture “About the Network Arch”. It can be found on http://elearning-iabse.org/l20. A revised version can be found on my homepage.

Nine students from TU-Dresden, Germany, have done their graduation theses in Grimstad. Their names can be found on page 94b. The author looks forward to continually updating his homepage during the rest of his professional life. Readers’ suggestions are very welcome. On some items that can be found in the author’s ~ 40 publications in the list of references the author has changed his mind. He is glad to set the record straight in this edition.

For network arches of moderate length and width the author recommends a concrete slab tie and H-beams in the arches. This author’s home page will help designers to achieve the maximum advantages of the structure. The author aims to inspire readers to construct their own network arches.

The author wants to give the readers a chance to become familiar with his ideas before they start to design something preferably better or possibly worse. The author wishes to help everybody that is in the process of building a network arch. His pension is so high that his services are extremely moderately priced.

The author would like to thank the colleagues mentioned on page 94b for suggestions and corrections to this edition. He strongly encourages more suggestions, comments and corrections. He is a dyslectic who appreciates help. The author apologises for repeating himself over and over again. His poor excuse is: ”Repetitio est mater studiorum”. A translation into English might be: “Repetition is the mother of studies”.

Network arches have been built or are being built in Austria, the Czech Republic, Slovakia, Poland, Belgium, Luxembourg, Norway, Germany, Austria, Spain, Hungary, Romania, New Zealand, Argentine, Australia, China, Taiwan, Philippines, Japan, Solomon Islands, Abu Dhabi, Bahrain and the USA. The author is delighted about this.

This edition gives the state of the manuscript medio 2014. The references Schanack & Brunn 2009, Schlaich, J. et al. 2008 and Schanack 2009 and 2009a is good supplementary reading.

Grimstad, Norway, March 2014 Per Tveit per.tveit@uia.no

On references: A reference is given by author and year. For instance: (Nielsen 1930) indicates that Nielsen published something on the subject in 1930. The author finds that this method gives valuable information without forcing the reader to look at the list of literature at the end of the publication.

When referring to information on the internet one should often give page numbers or numbers of figures. That makes it easier to check statements. It is much more difficult to get hold of books and publications.

On tonnes: In this publication t, tons or tonnes mean metric tonnes, which are 1000 kilos.

AN EXPLANATION OF THE EFFICIENCY OF NETWORK ARCHES

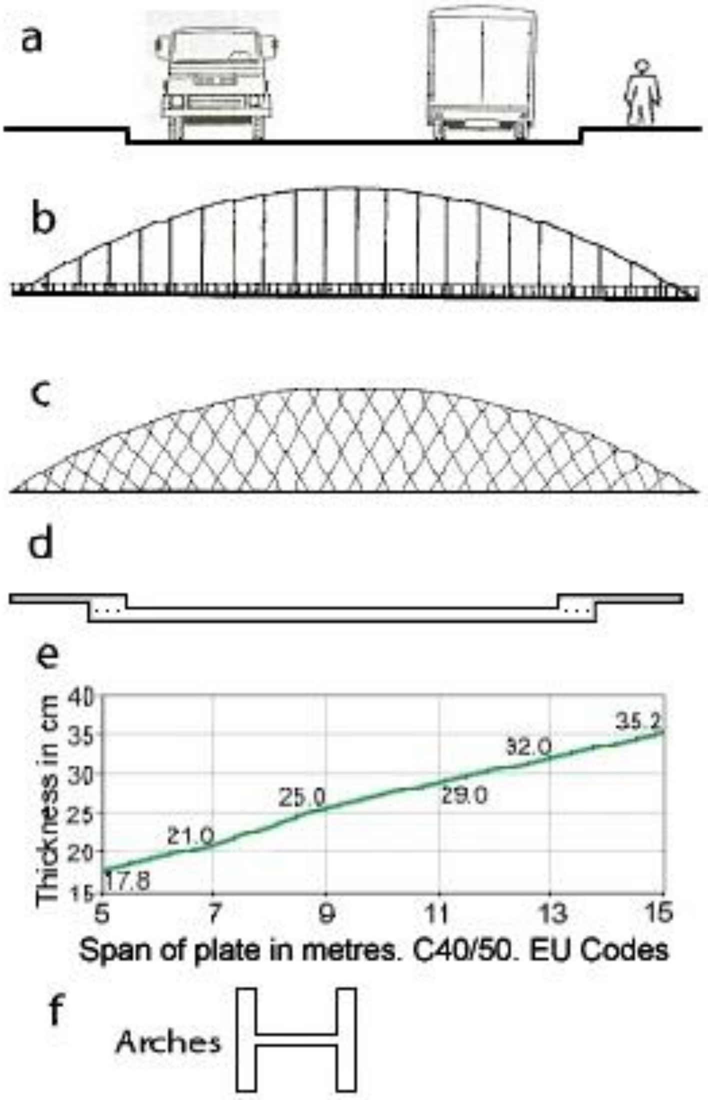

Fig 1. Stages in the design of network arches

The purpose of a bridge is to take traffic over an obstacle. The traffic can be on a road as in fig. 1a. Often there is no room for members under the bridge. For an evenly distributed load a parabolic arch with vertical hangers like in fig. 1b is a very good solution. The forces in all members are predominantly axial forces.

For uneven loads it is often better to use crossing hangers like in the network arch in fig. 1c. Then all loads are led to the arches in such a way that there is very little bending in the chords. See figs 85 to 87. In trusses secondary stresses and load between the nodes create bigger stresses than in a well designed network arch.

The simplest tie would be a concrete slab spanning between the arches. See fig. 1d. The slab and the edge beams distribute any load between many hangers.

Fig. 1e shows the necessary thickness of a slab. The transverse bending in the middle of the slab is normally bigger than the longitudinal bending in the tie. See p. 14. Thus there is no need for steel beams in the tie.

The tensile force in the tie is best taken by prestressing cables in the edge beam. When there is little or moderate load on the span, the tensile force in the cables gives a beneficial compressive stress in the tie. This leads to less maintenance of the tie.

The hangers give the arch good support in the plane of the arch. Universal columns or American wide flange beams like in fig. 1f can be used. They give very slender and good-looking bridges with low upkeep. The universal columns in the arches should be turned like in fig. 1f. Then the buckling strength in the plane of the arch and out of the plane of the arch can be about the same. High strength steel is well utilised. Fig. 98 on p. 93 shows that much steel can be saved by using optimal network arches instead of arch bridges with vertical hangers. The network arch is equally well suited for rail and road bridges.

At suitable sites the arch bridge indicated on this page gives a very light and economical bridge if economical methods of erection can be found. The network arch can be built on a scaffold. See fig. 6d, p. 6b and fig. 7a, p. 7a. Sometimes a temporary lower chord can be used. Combined with arches and hangers it can make a steel skeleton that can be moved if lifted near the ends. See pp. 29k-30a and 50-55. The steel skeleton can support the casting of the concrete tie. In coastal areas big floating cranes can be used to lift steel skeletons or finished spans over 300 m from the shore to the pillars.

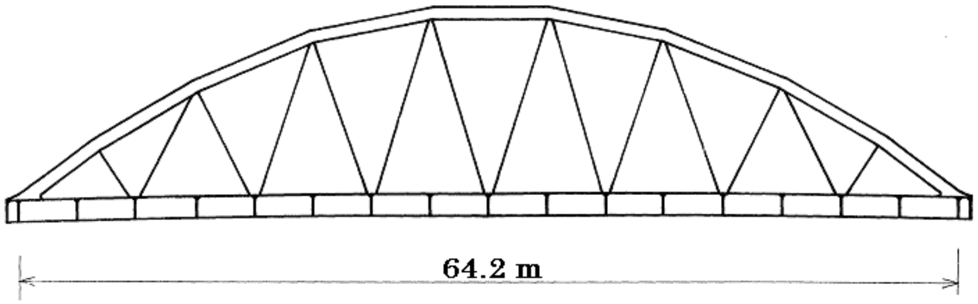

Fig. 2. Tied arch over Mänam Pasak, Aynthia, Thailand

To explain the advantages of network arches, the author starts with an arch bridge built in Thailand in 1942. Krück 1946. See fig. 2. In this concrete bridge the hangers were steel rods that could not take compression. For the loads and materials used between the two world wars this was an efficient structure. As long as the steel rods have tension, the bridge acts like a truss with little bending in the chords.

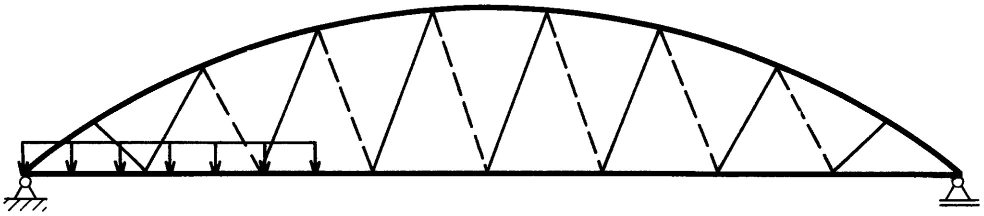

Fig. 2a. One-sided live load on the span might make the dotted hangers relax

With today’s loads and materials many hangers may relax due to load on one side of the span as indicated in fig. 2a. The hangers’ tendency to relax might be counteracted by increasing the distance between the nodal points. See fig. 3. This, however, would lead to increased bending in the chords and less buckling strength of the arch.

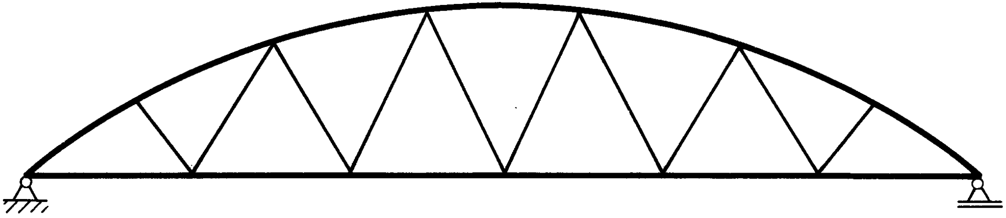

Fig. 3. Increased distance between the nodal points gives decreased tendency for the hangers to relax

Between the nodes the arch has a tendency to move upward and the lower chord has a tendency to move downward. Thus it would be an advantage to put in an extra set of hangers between the chords as shown in fig. 4a.

Two sets of hangers give smaller buckling lengths in the arch and less bending in the chords. This effect is even greater if we put in three sets of hangers. See fig. 4b. This structure has three trusses on top of one another. The author’s definition of a network arch bridge is an arch bridge where some hangers cross other hangers at least twice.

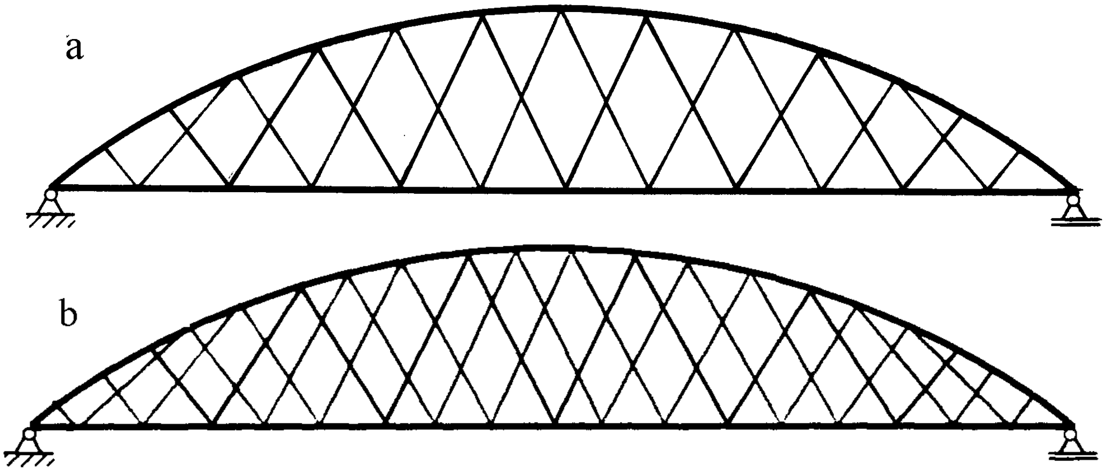

Fig. 4. Tied arches with two and three sets of hangers respectively

The network arch can be seen as a simply supported beam with a tensile and a compressive flange. The hangers are the web. Most of the shear force is carried to the supports by the vertical component of the force in the arch. Much of the variation in the shear force is taken by variation in the hanger forces. The hangers distribute the load between the chords in such a way that the chords have little bending.

The axial forces in the tensile and the compressive flanges are inversely proportional to the distance between them. In tied arches, aesthetic reasons limit the distance between the arch and the tie. When the rise of the arch has been decided, saving of materials depends mainly on whether or not a design gives light chords and a light web. The arch could be part of a circle. This gives evenly distributed bending moments in the chords. A reduced radius of curvature near the ends of the arch can give less bending in the wind portal and a constant axial force in a longer portion of the arch.

When the tie is a concrete slab the upper nodes of the hangers should normally be placed equidistantly along the arch. The members between the last node and the end of the arch can be a little longer than the other members. If universal columns are used in the arches, the lower half of the members in the wind portal can have a steel plate on top of the arch. The cavity under the steel plate can be filled with concrete to make it more collision resistant.

All hangers should have the same cross-section. With careful choice of the slope of the hangers, the force in the hangers can become surprisingly even. See the chapter on the optimal arrangement of hangers p. 26. The tie has a concrete slab spanning between the planes of the arches. The footpaths are outside the arches. The biggest bending moment in the tie is usually found in the middle of the slab between the arches. The longitudinal bending is usually smaller. If high-strength concrete is used, the distance between the arches can be more than 16 m.

The small edge beams in the planes of the arches must be able to carry the hanger forces. They must also have room for the prestressing cables that take the axial forces between the ends of the arches. These prestressing cables give the tie a moderate longitudinal prestress. Such longitudinal prestress probably contributes to preventing problems at the lower end of hangers that go directly into the concrete.

From the hangers the arch gets good support in the plane of the arch. Thus it has little tendency for buckling in the plane of the arch. All the members in an optimal network arch efficiently carry forces that can not be avoided in any simply supported beam. Therefore it is a most efficient structure. The network arch uses any kind of steel efficiently, but it will be even more competitive in combination with future steels with high yield strengths. There is valuable information on high strength steels in IABSE (2005).

An arch bridge with a parabolic arch and vertical hangers like in fig. 5 works well for evenly distributed loads. There are only axial forces in every part of the structure.

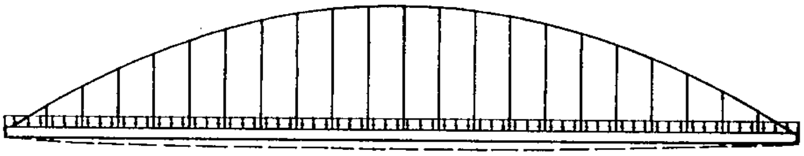

Fig. 5. Arch bridge with vertical hangers and even load

For live loads only on half of the span the axial force in the arch is reduced, but the arch moves to the right, and the deflections and the bending moments increase.

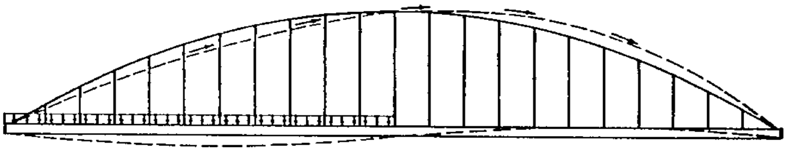

Fig. 5a. Load on half the bridge in fig. 5

The type of bridge in fig. 5 is less efficient for increased modern live loads and modern materials. That is because the stronger materials lead to reduced cross-sections of the chords and thus to reduced bending capacity in the chords.

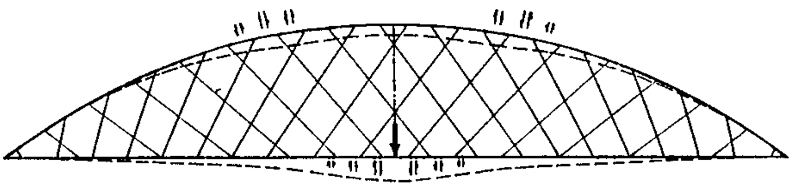

Fig 5b. Network arch

Fig. 5b shows a network arch. Sloping hangers reduce the bending moments in the chords. It can be seen as a simply supported beam consisting of many trusses on top of each other. A concentrated load gives some bending, but the load does not have far to go to distribute itself to all the trusses. The distribution is indicated by double arrows with opposite directions. Thus the bending moments are very small.

One can normally get a good estimate of the axial force in the chords with the help of the influence lines in figs 41, 63, 64, 65, 77, 81 and 82. (Tveit 66 p. 251) has formulas for calculating the axial forces in the chords. Normally it is enough to calculate the axial forces in the middle of the span before more precise values are calculated by means of a computer program. The force in the arch varies little till we get down to the wind portal. The bending moment is biggest and the prestressing force is smallest in the middle of the span. The formulas are simple.

The formula for the compressive force in the arch in the middle of the span is: $N= ql^2/8f+fq/2\ \tan^2 v_h$

The formula for the tensile force in the tie in the middle of the span is: $N=ql^2/8f-fq/2\ \tan^2 v_h$

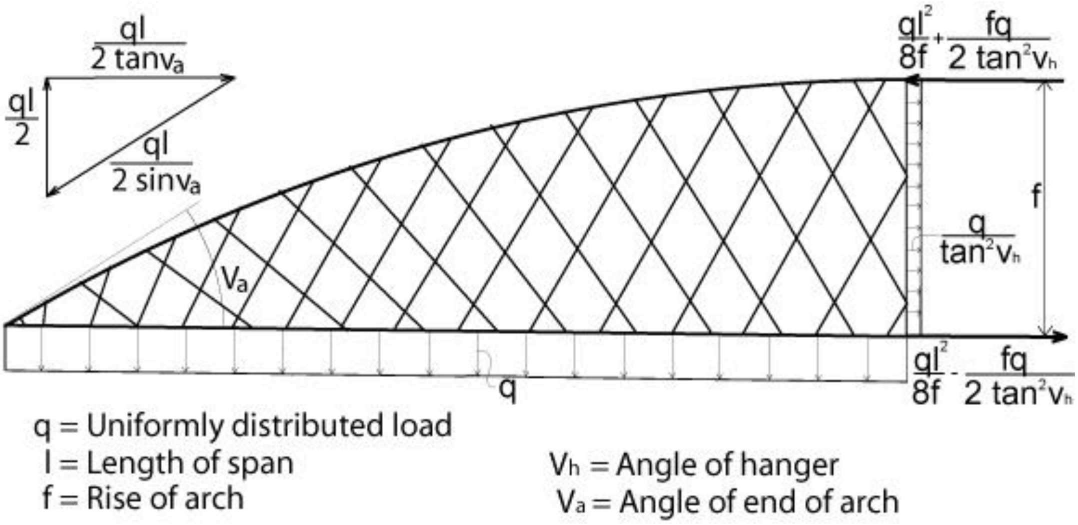

Fig. 5c. Axial forces in the middle and at the end of the chords

Fig. 5c gives the axial forces due to evenly distributed loads in the middle and at the ends of the chords. The influence lines for axial forces in the chords are ~triangular. See figs 41, 63–65, 77, 81 and 82.

For calculation of the axial force at mid span due to a concentrated load, the load can be replaced by a uniformly distributed load equal to the concentrated load divided by half the span. This is because the maximum ordinate of the influence line is roughly twice as big as the average ordinate. This makes it easy to find the axial force due to concentrated loads. Preliminary hanger forces can be found by looking at influence lines on pp. 57, 58, 60 and 72.

The nodes in the lower chord should be placed in such a way as to obtain nearly the same maximum force in all hangers and to give all hangers a suitable resistance against possible relaxation. This has been achieved in the bridges in fig. 8, p. 8. There will be more on this for instance on pp. 26-29j.

When some hangers relax, the bending moment in the chords increases and the buckling strength of the arch is reduced because the support of the arch is less stiff. This is normally compensated for by the inevitable reduction of the normal force in the arch. There is more on this on pages 67 and 68.

More relaxation of hangers is allowed if the arch is a box section like in the bridges for Vienna, pp. 59 to 72. Fewer hangers should be allowed to relax when the arches are universal columns like in Teich and Wendelin 2001. See fig. 97, p. 93. This is because the arch in the bridges for Vienna has considerable capacity for taking the increased bending due to the relaxation of hangers. In long bridges with universal columns in the arch and slender ties it might not be advisable to let any hangers relax in the ultimate limit state. Here an increased skew load might quickly give too much bending in the arches. More on this on pages 27, 29i, 67 and 68.

In the serviceability limit state it might be best if all hangers are in tension. This is a must if the arches are universal columns or American wide flange beams. In any case that would simplify the calculation of the hangers. The arch should have a continuous curvature. This simplifies production. If the radius of the curvature is smaller in the wind portal, the wind portal becomes shorter and the axial force in the arch has less variation. Furthermore the rotation of the ends of the bridge is reduced. Brunn and Schanack 2003 chapter 6.

THE NETWORK ARCH AT STEINKJER NORWAY

After eight years of study the author was given the opportunity to build two network arches. These network arches are still in good shape. Steinkjer Municipality 85 kilometres northeast of Trondheim, Norway, built the first one. The town engineer Einar S. Balgaard thought that good ideas should be given a chance. The network arch was more economical than an arch bridge with vertical hangers. It was finished in the spring of 1963. See pp. 5b to 6c.

It was the author’s luck that Terje Moe, a very able young architect, advised him when he designed the Steinkjer Bridge. He said: “Let your design show the flow of forces in the bridge”. Later on Terje Moe became a professor of architecture. Nobody checkted the author’s calculations. That simplified the design process, but the author thinks that the calculations should have been checked.

When the bridge was designed, computers could not calculate the effect of hangers relaxing. To simplify calculations, the slopes of the hangers prevent the relaxation of any hanger for the loads and codes used at the time. This was achieved by the method explained on pp. 28 – 29i.

Details of arch and windbracing are shown on page 56. The joints in the arch are simple flanges because there is hardly any bending in the chords. Still the details are costly to produce compared to the details of the network arch in fig. 97 on p. 93.

For data and influence lines for the Steinkjer Bridge see pp. 56-57. The span of the Steinkjer Bridge is 0.3m shorter than the influence lines. The shortening takes place only at the end nodes. This shortening gives less bending at the lower end of the arches. It also gives better utilization of the shortest hanger and smaller bending moments at the end of the attached span at the north bank.

The prestressing cables that take the axial force between the arches are placed centrally to reduce the stress variation that can cause fatigue. A drawing of the railing outside the footpath is shown in fig. 34 on page 24.

Materials per m^2 of the main span: Concrete with the cube strength of 35 MPa 0.22 m^3. Structural steel with a yield stress of 355 MPa 60 kg. Reinforcement 40 kg. Prestressing steel 7 kg. A lecture on how to adjust hangers in network arches was a prerequisite for the author’s dr. ing. in 1964. A revised version of the manuscript can be found at the author’s home page http://home.uia.no/pert

Fig. 6. Bridge at Steinkjer, Norway. Tveit 64 and 66.

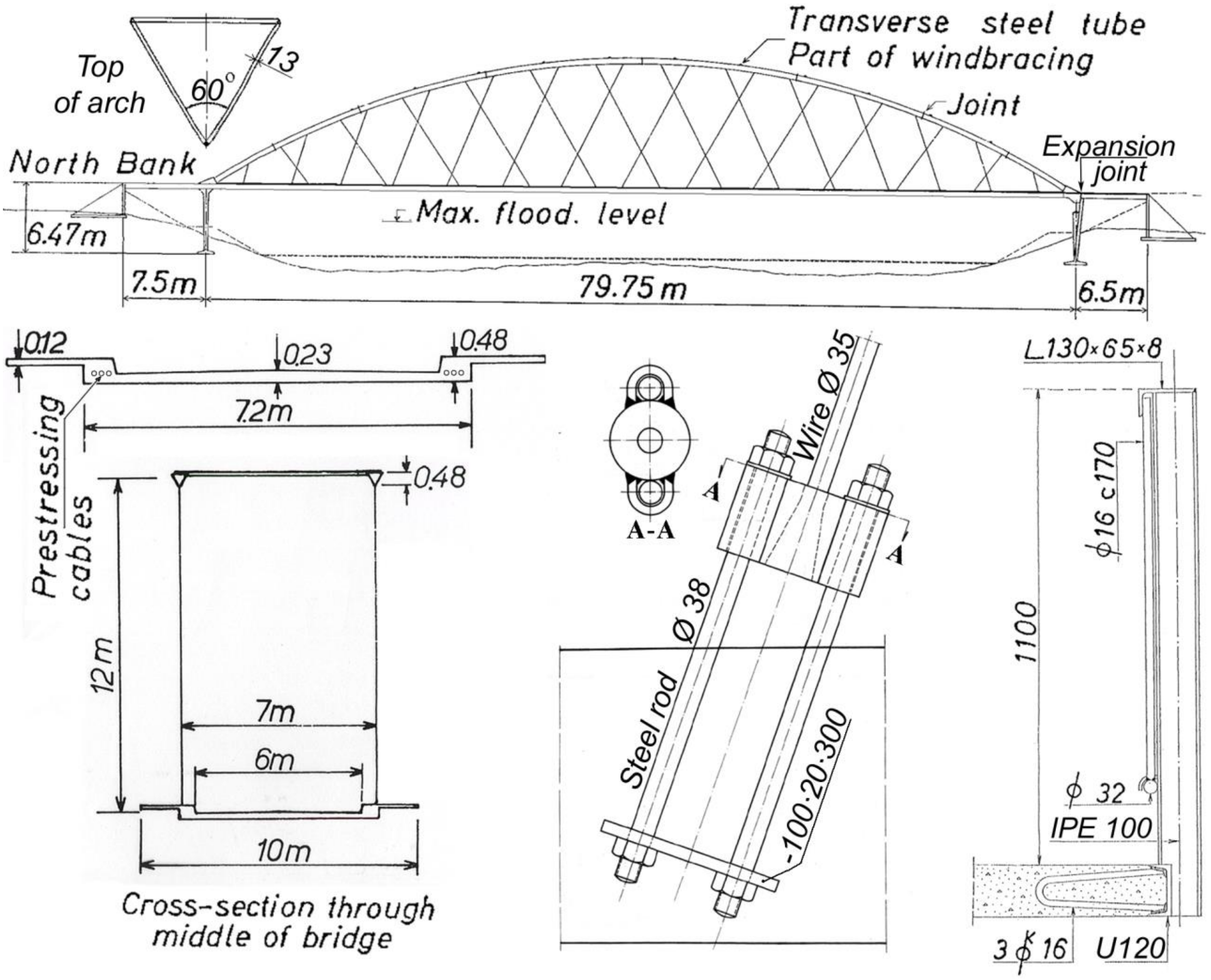

Fig. 6a. The network arch at Steinkjer was opened in the spring of 1963.

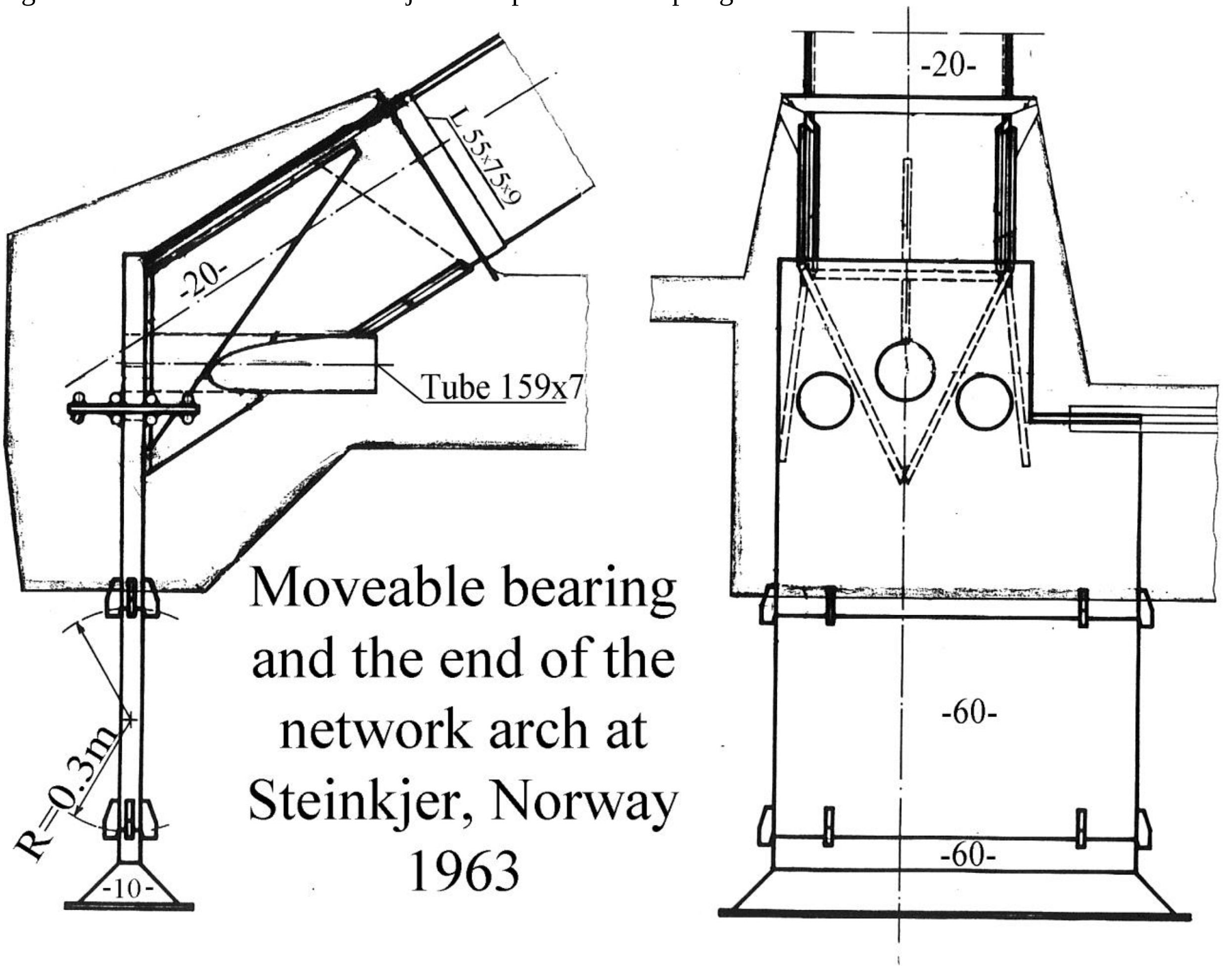

Moveable bearing and the end of the network arch at Steinkjer, Norway 1963

Fig. 6b. Moveable bearing of the network arch in fig. 6a

Fig. 6c. Photos of the network arch at Steinkjer

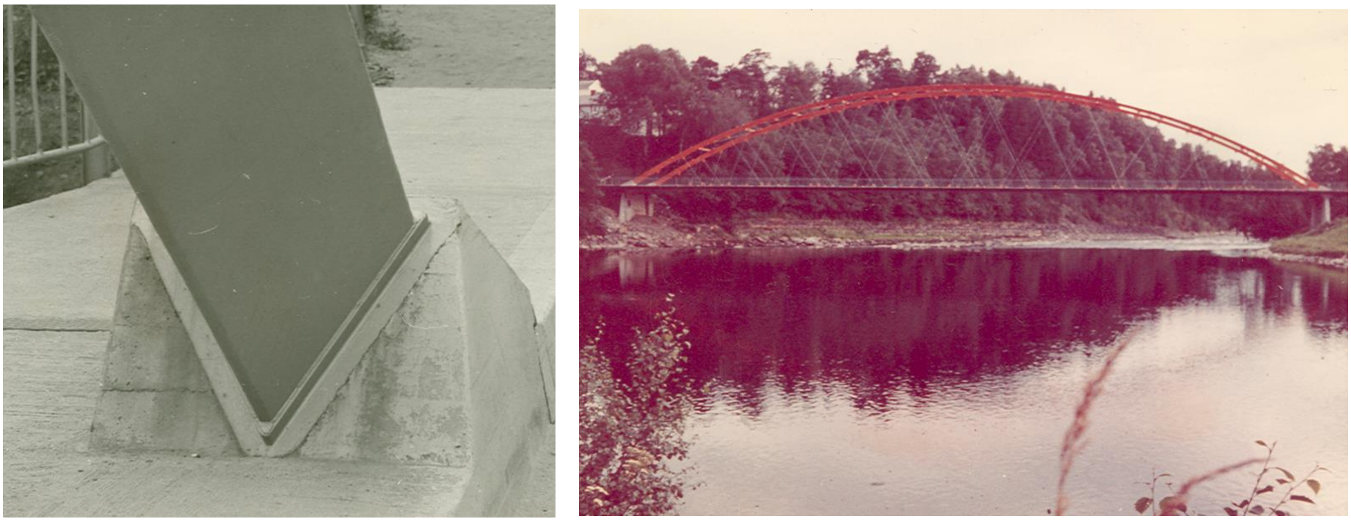

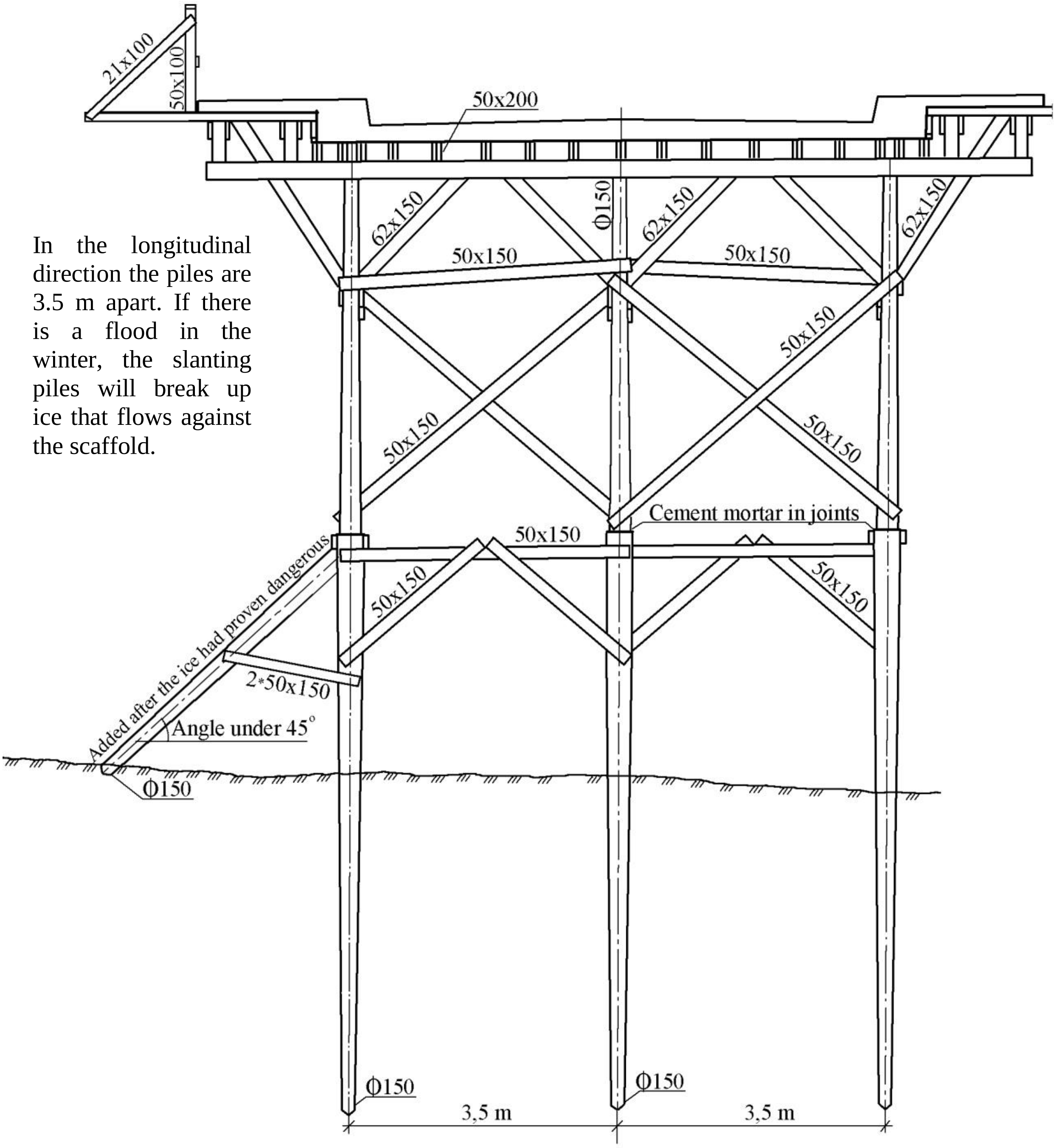

In the longitudinal direction the piles are 3.5 m apart. If there is a flood in the winter, the slanting piles will break up ice that flows against the scaffold.

Fig. 6d shows the scaffold for the tie of the network arch at Steinkjer

Experience from the first 50 years of the Steinkjer network arch.

The network arch at Steinkjer is in good shape after over 50 years. Given good maintenance it is likely to last at least another 50 years. More on this can be found in (Tveit 2007).

The tie was cast on a scaffold on piles in the river bed. See fig. 6d. The cube strength of the concrete was well over the prescribed 35 MPa. The content of the cement was 450 kg/m^3. The steel arch and the hangers should have been carrying the tie before the winter set in, but the steel mill did not deliver the steel as promised. A flood came after the ice was around 0.15 m thick and swept away over 17 m of the support under the tie. Due to this the tie was sagging 0.2 m and cracks over 2 mm wide developed.

Damage due to the flood with winter ice was overcome. The scaffolding was repaired and strengthened in a makeshift way. Twelve piles in the river could not be replaced. When the steel had been erected, the tie was straightened by the tensioning of the hangers. Prestress closed the cracks. Now they are hard to find.

Damage due to lack of railings to protect the hangers

There are no railings between the traffic and the hangers. See fig. 6c on p. 6a. That was a mistake. As a result four or five lower ends of hangers have been bent by vehicles bumping into them. The stresses in the steel are small where the steel rods enter the concrete. The concrete around the hangers has not been damaged. There is no point in bending the steel rods back because that might damage the concrete. Generally the concrete around the lower ends of the hangers seems to be in good shape. This might partly be due to the longitudinal prestress of the tie. For possible problems with hangers coming out of the concrete see p. 55a.

Railing outside the footpath

The posts, IPE 100, of the railings outside the footpath, (see figs. 6 and 6a and fig. 34 on p. 24), are welded to channels on the outer edge of the concrete. The welding was done slowly using little heat to avoid cracks between the channels and the concrete. To give the pedestrians a feeling of safety, the top of the railing is 130 mm wide. Outside the main span a vehicle has run into the vertical bars in the railing and has bent some of them. However, it was easy to straighten the bars by hand.

There is a rod, Ø32, at the bottom of the grid inside the railing. In order to reduce stresses in the railing due to creep, shrinkage and bending in the concrete tie, this rod is not fastened to the vertical posts. Tveit 2007. Fig. 34 on p. 24. Since the IPE 10 posts at the ends of the main span are still vertical, we can conclude that creep and shrinkage have not made the main span shorter than it was less than half a year after the tie was cast. Maybe this is due to delayed hardening of the cement.

The state of the concrete

Little de-icing salt has been used on the bridge. Most of the concrete is in good shape. On the surface of the footpath porous pebbles have absorbed water that has frozen in the winter. This has broken the concrete cover over the pebbles and has led to some cavities about 1 cm deep. To compensate for this, an epoxy membrane has been glued to the footpath.

There are some very small dirty cracks all over the concrete, but there is no decay around these cracks. In a few places there is rust on the surface. Probably some reinforcement bars have come too near the surface. So far the rust has not yet caused concrete to fall off.

Damage to the steel

A vehicle has bumped into a tube above the lane at one end of the bridge. See figs 6c. There was extra bending capacity in the tube to take the resulting bending. The diagonals in the windbracing are tension rods, but the diagonals at each end of the span are the same as the hangers. See fig. 62 on p. 56. The steel structure is in good shape after 50 years. Good maintenance of the paintwork has contributed greatly to this.

Fig. 7. Bolstadstraumen Bridge. The main span is 84 metres.

The second network arch was built over Bolstadstraumen ~80 km northeast of Bergen. In the two Norwegian network arches the arches had triangular cross-sections that were costly to produce. See fig. 6a on p. 6. Still both bridges were built because they cost less than competing designs. Network arches with arches made of universal columns or American wide flange beams will be more competitive. See figs 16, 17, 19, 20 and 97 on p. 93. (Tveit 64 and 66).

The Bolstadstraumen Bridge was opened at the end of 1963. Influence lines are found on page 58. In the network arches at Steinkjer and Bolstadstraumen no hangers relax for ordinary loads. This precaution was used partly because there was no computer capacity for calculating the effect of hangers relaxing. The Bolstadstraumen network arch used 44 tonnes of structural steel and 7 tonnes of prestressed steel. The rise of the arch was 18% of the span. A competing costlier design with vertical hangers would have needed 125 tonnes of structural steel. The rise of the arch was 21.5 % of the span. Both bridges had a concrete slab spanning between the edge beams.

It seems reasonable to define the slenderness of an arch bridge as the span divided by the sum of the depth of the chords. By this definition the slenderness of the Bolstadstraumen Bridge is 91. It was the world's most slender network arch for 45 years. Then the Mangamahu Bridge in New Zealand took over as the world's most slender arch bridge. In 2010, the Brandanger Bridge took over this title. See fig. 101.

For the network arch in figs 23 and 8 and pages 59 to 62 the slenderness is 200/(1.24+0.5)=115. For the slimmer bridge in fig. 10 the slenderness is 135/(0.403+0.5)=150. For the bridge in fig. 97 on p. 93 the slenderness is 155. For the Brandanger Bridge in fig. 100 the final outer diameter of the arch is 711mm. The height of the tie is 400 mm. This gives a slenderness of 199. The Brandanger Bridge was opened in 2010. It will probably be the world's most slender arch bridge for many years to come.

The slenderness of the network arch is important from the aesthetic point of view. (Leonhardt 1991) said: "…we recognise the need to integrate a bridge into its environment, landscape or cityscape, particularly where the dimensional relationships and scale are concerned. Many mistakes have been made during the past decades by placing massive concrete blocks in the heart of older areas of a city….Sometimes, long-span bridges with deep, heavy beams spoil lovely valley landscapes or towns."

It is simple psychology of perception that when we look at a landscape with a network arch bridge, we automatically concentrate on seeing the bridge or on seeing the countryside. That is less straightforward if a bridge has high beams that cover up part of the countryside.

In narrow network arches the lower chord of a network arch bridge should be a simple concrete slab. Slabs are preferable to beams as far as upkeep is concerned. The slight longitudinal prestress from the prestressing cables between the ends of the arches also reduces upkeep.

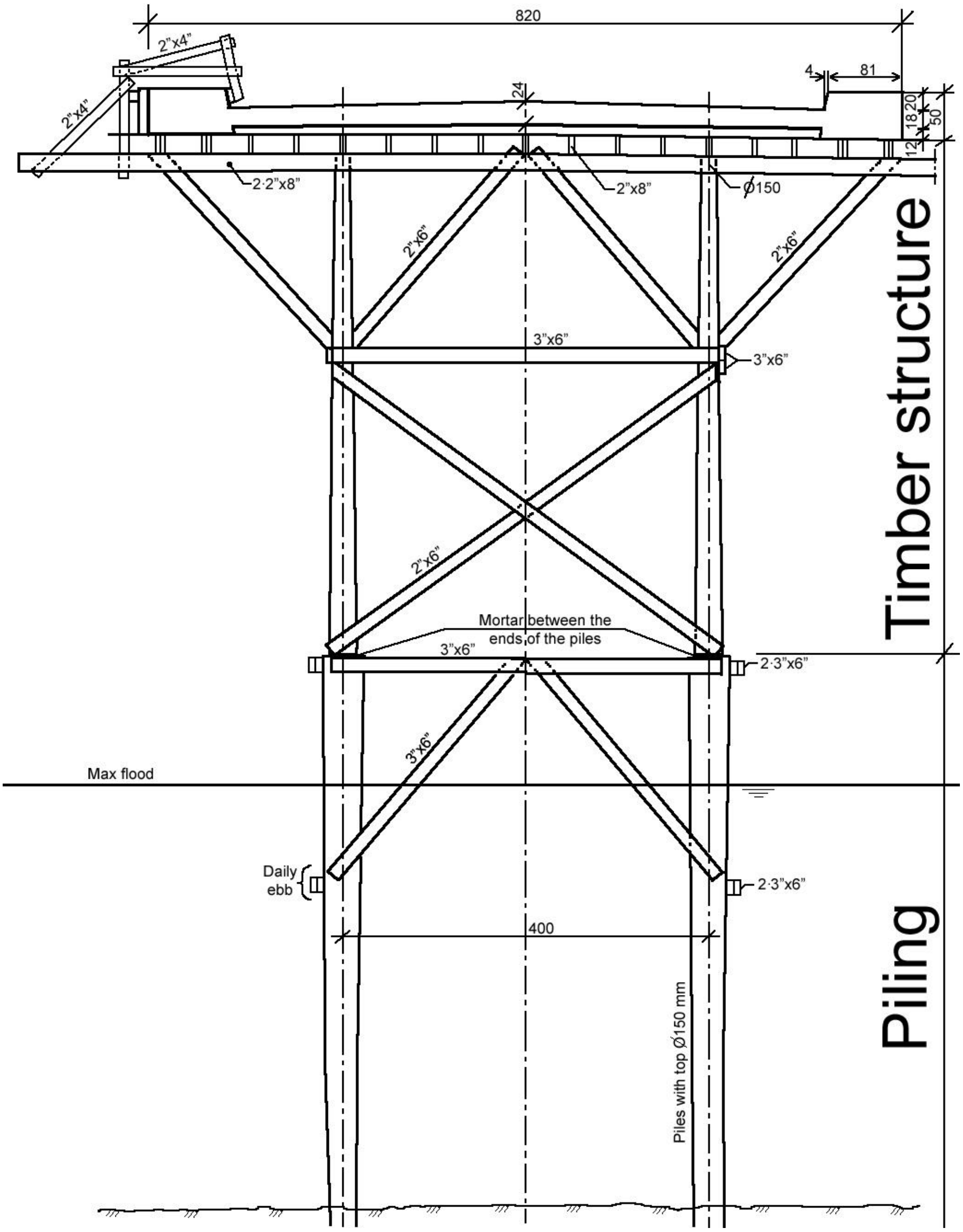

Fig. 7a. Scaffolding for erecting the concrete and steel of the network arch of the Bolstadstraumen Bridge

In the first two Norwegian network arch bridges the ties were cast on timber structures resting on piles in the river bed. See fig. 7a. That gave a convenient platform for erecting the arches and putting in the hangers. The hangers were tightened till they carried the concrete deck. Then the timber structure was removed. The form of the elements of the bridge was measured carefully prior to the erection of the steel. In order to control built-in stresses, great care was needed in the adjustment of the hangers.

The force in a hanger was found by measuring the deflection of the hanger due to a transverse force on the hanger. By comparing the actual forces in the hangers with the calculated ones, and the form of the loaded bridge with the intended forms of the arch and the deck, it was possible to determine which hangers needed adjusting.

After the bridge had been built many houses were built south of the bridge. For this reason some of the lane has been made a footpath. The traffic is so little that this seems a change for the better. The Bolstadstraumen Bridge is included in a national plan for the protection of roads bridges and associated cultural relics.

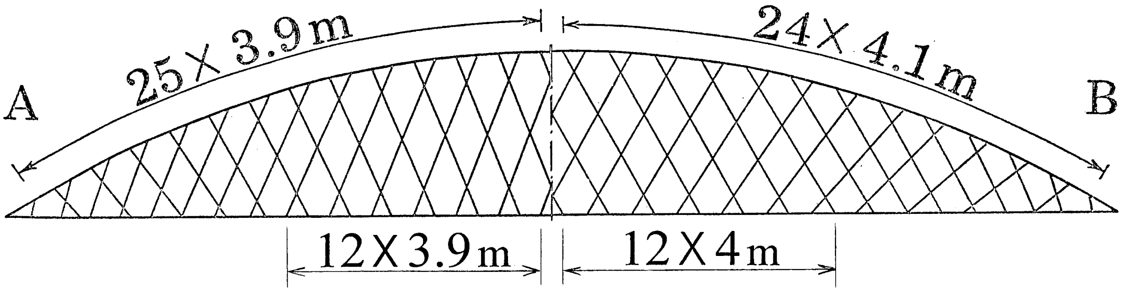

Fig 8. Arrangement of hangers for two bridges spanning 200 m

The hanger arrangements in fig. 8 were designed for the IABSE congress in Vienna 1980. These hanger arrangements are near optimal for the loads. pp. 59-72. (Tveit 80a and 80b).

Some readers might be surprised that the author tries to avoid two hangers meeting at points in the chords. Only one hanger in each nodal point makes the nodal points simple, but other reasons are more important. In a normal network arch the decisive load case is maximum load on the whole span. For this load case equidistant nodes along the arch give the smallest buckling lengths in the arch and the smallest bending moments due to curvature of the arch.

The axle loads on the concrete slab between the arches spread out well before they reach the edge beam. See fig. 71 on p. 66. Therefore equal distances between the nodes along the lower chord give the smallest bending moments in the edge beam. This is not so important because the longitudinal bending in the tie is not great. Please note that the axle loads and the hanger force can be of the same magnitude.

Another group of load cases might also be decisive. This is live load on part of the span. Then some hangers might relax. When many hangers relax, the network arches function in roughly the same way, whether the hangers meet in the nodal points or not. There are two reasons why one should not let load on part of the span be decisive. 1: These load cases are complicated to calculate. 2: If the bridge has to carry bigger loads in the future, loads on part of the span that make some hangers relax will lead to a bigger increase in stresses than loads on the whole span. See fig. 73 on p. 68.

For the two bridges shown in fig. 8 the nodal points in the lower chord are equally spaced along the middle of the tie. The hanger arrangement on the right makes the hangers less inclined to relax. Thus it is more likely to be optimal in the future when live loads increase and stronger concrete is used.

Fig. 9 shows predicted structural steel weights for various types of highway bridges. (Max. Herzog, 1975), compiled most of the lines. The author compiled a line for network arches for the IABSE congress in Vienna in 1980. (Tveit 80). The dot in the diagram corresponds to the network arch at the Åkvik Sound Bridge designed in 1998. See the following pages.

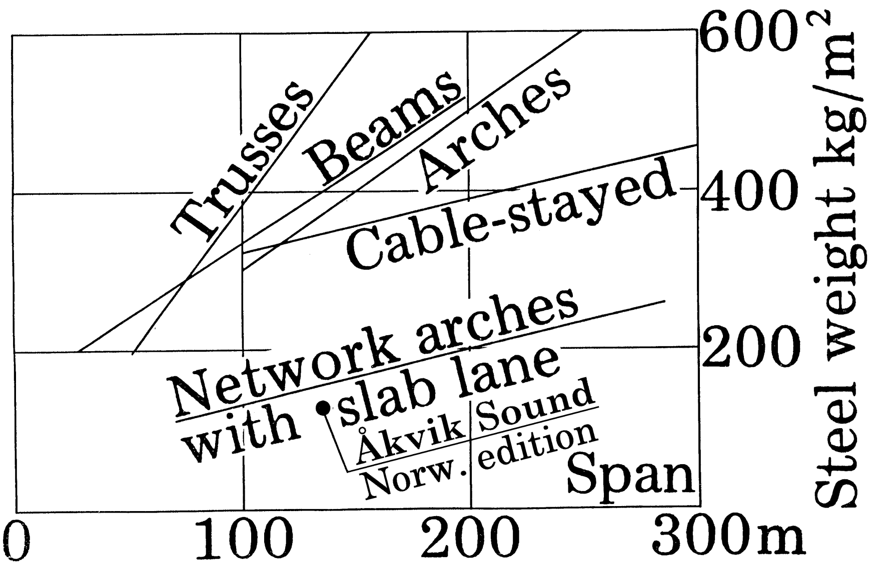

Fig. 9. Amount of steel in different types of highway bridges

ÅKVIK SOUND BRIDGE SUGGESTED IN 1998

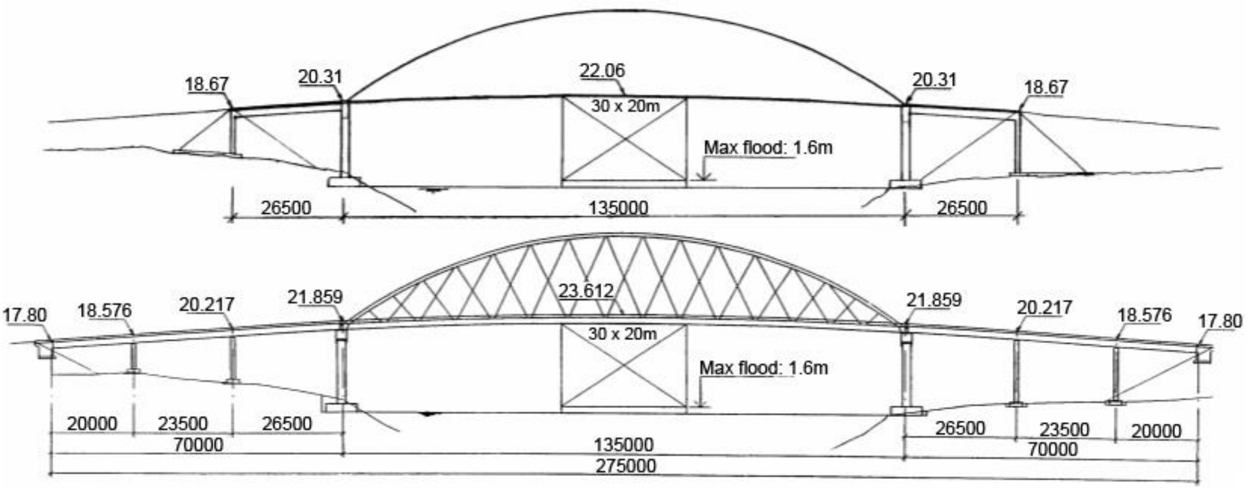

Fig. 10. Two bridges designed for the Åkvik Sound in Northern Norway. Tveit 1999 a, b, and c.

In 1997 to 1998 a group of steel users in Norway were looking for competitive bridge types for spans between 120 and 300 metres. The group initiated the design of the two bridges shown in fig. 10. The author suggested the slim bridge. Its steel weight is indicated by the dot in fig. 9. See previous page. Teich and Wendelin 2001 continued the work on this bridge. Pp. 93-93a and http://home.uia.no/pert under the button “Masters Theses”.

A highly reputed Norwegian firm designed the heavier bridge. It is a Nielsen bridge because each hanger cross other hangers only once. The lower chord of the heavier bridge is 1.5 metres deeper than the lower chord of the slimmer bridge. Therefore the ramps of the slimmer bridge can be made shorter.

In the bridge with many side spans a beam is carried across the fjord by an arch. In the slim bridge the lower chord of the arch is much slimmer than the side-spans. Thus aesthetic reasons argue for only two side spans. The ramps usually cost less per metre than the side spans.

The real thickness in the slimmer bridge is meant to be shown in the drawing, but the arches are never seen behind each other and the railings are not shown. Thus the real bridge would seem less slim. The hangers of the slimmer bridge are not shown because they would be less than 0.03 mm thick in the drawing. As can be seen from fig. 7 on page 7, they would hardly be seen even on a clear day. The skeleton lines of the slimmer bridge in fig. 10 are shown in fig. 12. See next page.

The lane loads used in the design of Norwegian highway bridges in fig. 10 are shown in fig. 11. On the footpath outside the hangers the maximum loads are 4 kN/m^2 and a single wheel load of 18 kN. When there is traffic load between the hangers, the load on the pavement outside the hangers is 2 kN/m^2.

The Åkvik Sound network arch could have been erected by the methods indicated in figs 21 and 22 on p. 12, fig. 39 on p. 29k. The main span of the Åkvik Sound network arch was redesigned by Teich and Wendelin in 2001. They used German loads and codes. In this publication that bridge is called the Åkviksound network arch. See page 93.

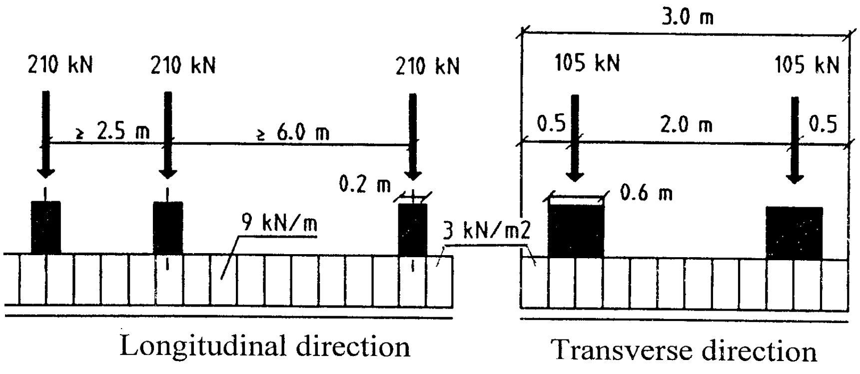

Longitudinal direction

Transverse direction

Fig. 11. Lane loads used for the design of the Åkviksound network arch in fig. 10

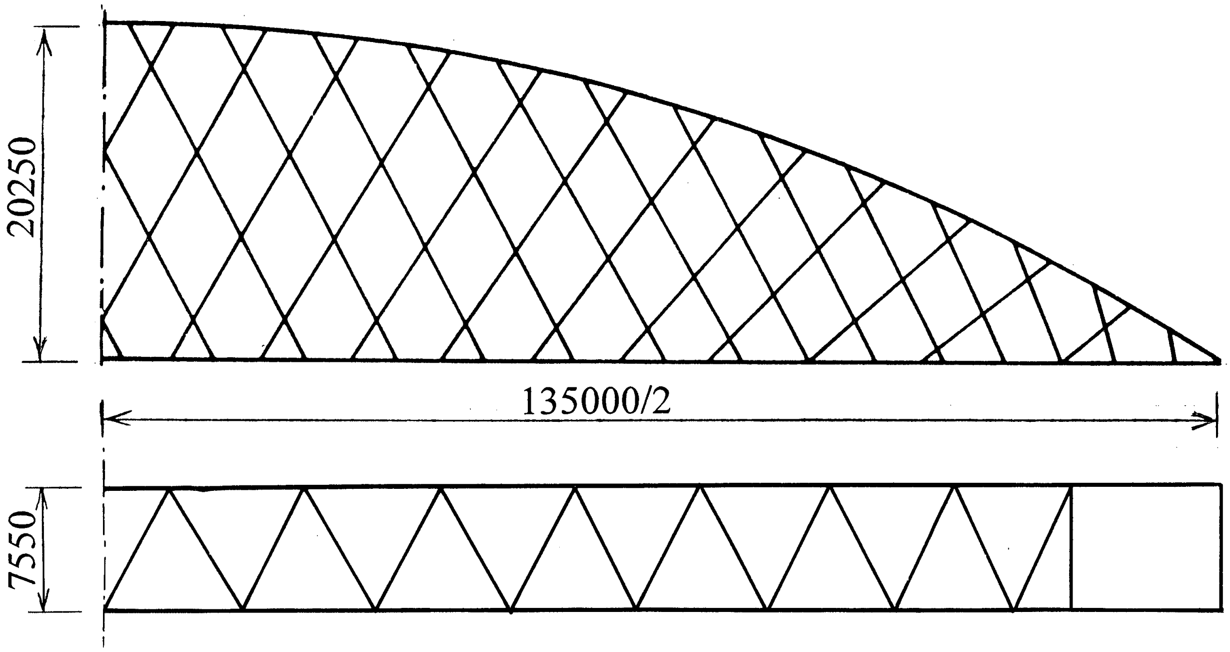

Fig. 12. Skeleton lines for arch and windbracing of the slimmer bridge in fig. 10 on the previous page

The cross-section of the tie of the slimmer bridge is shown in fig. 13. It is made of concrete with cube strength of 45 MPa. For the heavier bridge ~40% more concrete with cube strength of 55 MPa has been used. If higher cube strength had been used in the lighter span, the tie would have been lighter and the hangers may have been less steep. The number of hangers in the lighter span could have been reduced by 15% without any great increase in the steel weight.

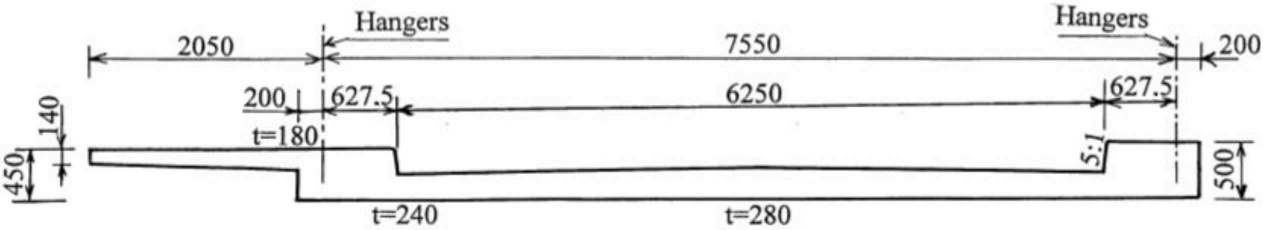

Fig. 13. Cross-section of the tie of the slimmer bridge

STEEL WEIGHTS OF
THE LIGHTER SPAN

Arches:	88 tons
Windbracing:	5 tons
Hangers:	16 tons
Miscellaneous:	3 tons
Structural steel:	112 tons
Prestressing:	18 tons
Rebars:	65 tons
Total:	193 tons

STEEL WEIGHTS OF
THE HEAVIER SPAN

Arches:	234 tons
Windbracing:	25 tons
Hangers:	42 tons
Transverse beams:	149 tons
Lower chord:	114 tons
Miscellaneous:	41 tons
Structural steel:	596 tons
Rebars:	83 tons
Total:	679 tons

Fig. 14. Steel needed for the two spans in fig. 10.

Erection costs will be smaller if there is little material to erect. For the lighter span, steel with a yield stress f_y=460 MPa is advantageous and has been selected. For the heavier span f_y=355 MPa and f_y=420 MPa have been chosen. The exposed steel surface that needs corrosion protection is 7 times bigger for the heavier bridge.

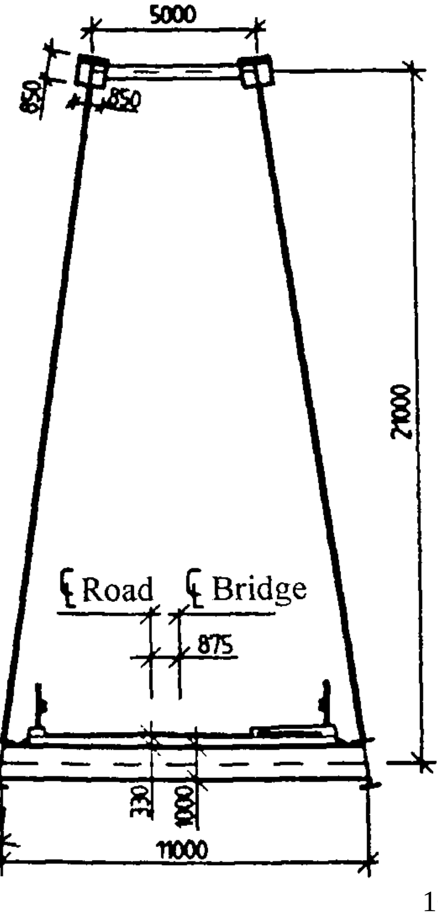

Fig. 15. Cross-section at midspan of the heavier bridge

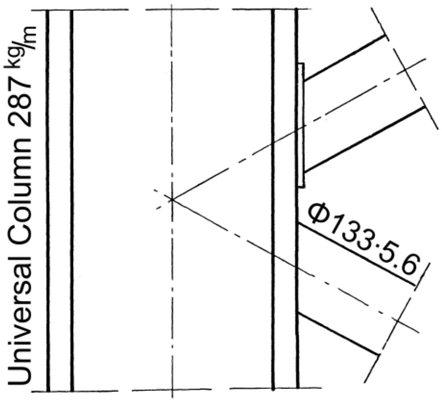

Fig. 16. Joint in the windbracing

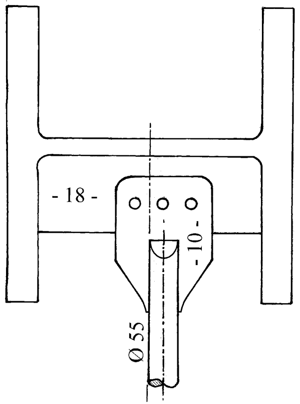

Fig. 17. Fastening of hanger to the stronger arch

For the heavier span the welds are 23 times as long as for the lighter span. The longer welds indicate that more parts need to be cut out and handled. Thus the price per ton might well be less for the lighter span. See also the table on page 93a. The main span in the lighter bridge uses only 28 % of the steel needed in the main span of the heavier bridge. Railings and expansion joints are not included in these weights.

The transverse beams in the heavier span weigh just as much as the structural steel in the lighter span. The transverse beams are heavy partly because the arches are outside the pavement and sloping towards each other. This increases the span of the transverse beams. Furthermore, there are no shear connections between the concrete lane and the steel of the transverse beams. This makes it easier to put the concrete elements in the lane in place.

To support the claim that the steel in the lighter bridge is not costly to fabricate, some structural details are shown in figs 16 to 20. Fig. 16 shows two ways of fastening the windbracing to the lighter arch. It can be done by welding or by flanges that are fastened to the tubes by means of high strength bolts.

In fig. 17 a hanger is fastened to the stronger arch by means of high strength bolts. The arches are universal columns. This profile is often used in high-rise buildings. The profile is ideally suited to the network arch where the buckling length is much smaller in the plane of the arch than out of the plane of the arch. The profile can be bent to the shape of the arch in the steel mill. This saves a lot of welding and other work.

Fig. 19 shows flange plates in a joint in the arch. The high strength bolts in the flanges are needed only for erection, because there is compression over the whole cross-section of the arch for all load cases. The joints in the arch can also be site welded. A possible design of the end of a network arch is shown in fig. 18. For the steel weight of the lighter bridge in page 9 rubber bearings have been assumed.

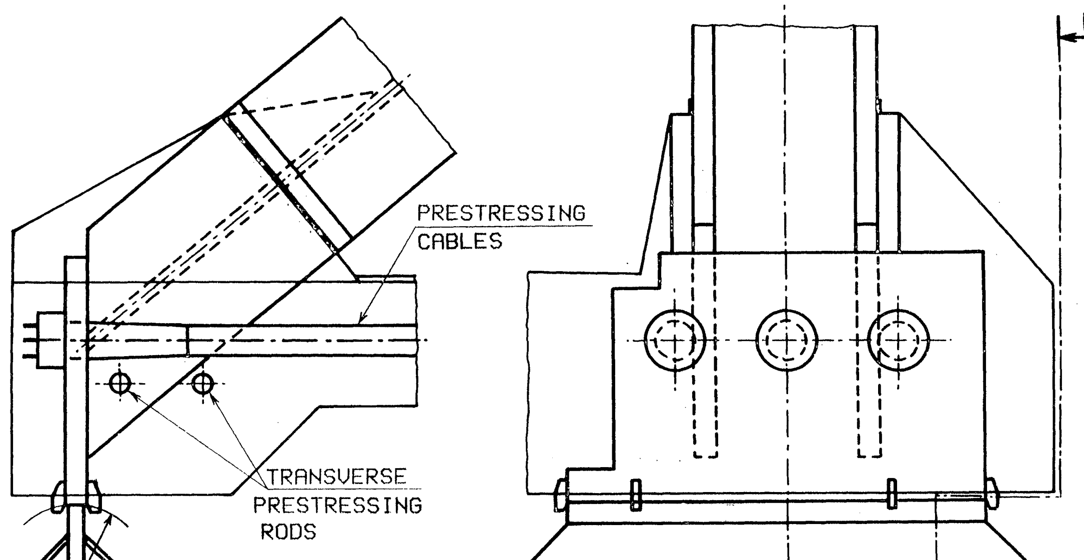

Fig. 18. Steel at the end of a network arch

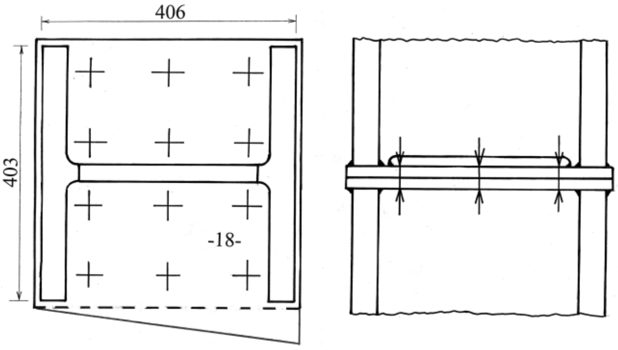

Fig. 19. Joint in the arch

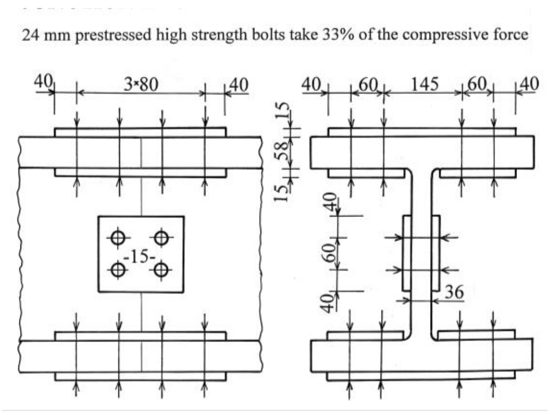
24 mm prestressed high strength bolts take 33% of the compressive force

Fig. 20. Junction in UC 356x406x467

The steel and concrete for the network arch for the Åkviksound would not be costly. The economics also depend on the method of erection. The finished network arch, including the concrete slab, weighs ~1000 tons. The whole span can be finished on shore and lifted to its final position by two big floating cranes of the type used in offshore work. See fig. 39 on page 29k. Using these cranes costs a lot.

The most versatile methods of erection utilise the fact that the structural steel, supplemented by a temporary lower chord, can form a steel skeleton with so much strength and stiffness that it can be moved. The steel for the temporary lower chord for the Åkviksound network arch weighs around 24 tons. An example of a temporary tie is shown in figs 21 and 22.

This temporary lower chord needs no corrosion protection. It can be produced on site using high strength bolts. When the steel skeleton and the reinforcement are in place, the lower chord can be cast. First the transverse beams at the ends of the arches are cast. Then the smallest edge beam is cast. See fig. 13.

To prevent bending moments due to hangers relaxing, the casting must start at both ends of the span and proceed to the middle. Then the biggest edge beam is cast in the same way. When the edge beams have been cast, they will take most of the bending in the tie. The prestressing cables will take most of the axial force in the tie. Finally the deck is cast. See also pages 30 and 30a.

Fig. 25 on page 15 shows how the structural steel in a network arch bridge can be erected on the side-spans and be moved into place by means of pontoons and/or cranes. See also pages 19a, 20, 29k, 34 and erection and removal of the temporary lower chord on pages 50a to 53a. See also (Tveit 2013a Pp. H-6, H-9, H-25 and H-28).

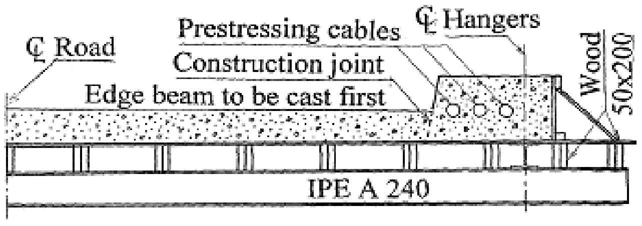

Cross-section of formwork and half the permanent and temporary lower chord. (Camber of the transversal beams is not shown)

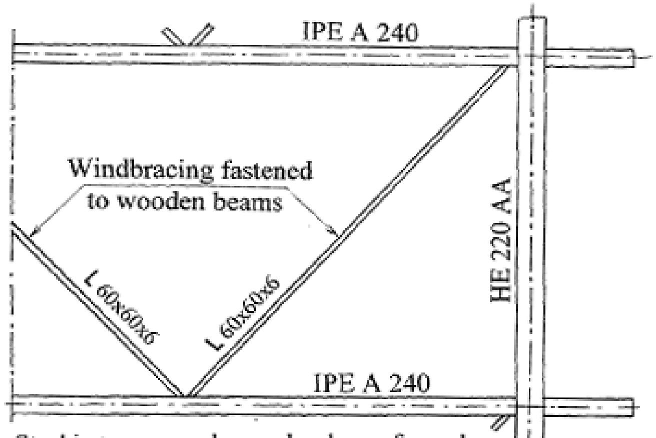

Steel in temporary lower chord seen from above

Fig. 21. Temporary lower chord
for the slim bridge in fig. 10

With slight alterations this temporary lower chord can be used in many different network arches. If the whole span is to be removed, a temporary lower chord can be used if the concrete is removed before the steel skeleton is removed.

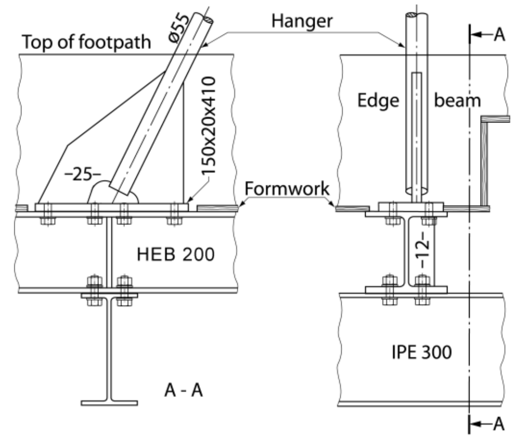

Fig. 22. Joint in the edge beam between a temporary lower chord and a hanger

Two tied-arch bridges spanning 200 metres are now going to be compared. The bridges are shown in fig. 23. The bridge with vertical hangers was built over the Danube in Bavaria in 1977. Kahman 1979. The author designed the network arch for the IABSE congress in Vienna in 1980. Tveit 1980 and pages 59 to 72. The two bridges are surprisingly similar. The rise of the arch at Straubing is about 7% higher. For the network arch the concentrated loads are bigger, but the total payload for the two bridges is about the same.

The tie of the narrow network arches should usually be made of concrete because the weight of the tie restrains the relaxation of hangers. The lower chord of the arch at Straubing is an edge beam and an orthotropic plate. The two arches have roughly the same cross-section and stiffness. The stiffness of the lower chord of the network arch is just under half the stiffness of the lower chord in the bridge with vertical hangers.

The lower part of fig. 24 on the next page shows a comparison between the influence lines for bending moments in the lower chord of the two spans. Please note that the maximum influence ordinate in the lower chord of the network arch is the same as for a simply supported beam spanning 5.6 m. The distance between the arches is 15 m. Thus it is obvious that the longitudinal bending in the tie is normally much smaller than the maximum bending found in the middle of the slab.

In long narrow bridges, however, the longitudinal bending might become decisive mainly because much of the strength of the concrete is needed for taking the variation of the axial force in the tie.

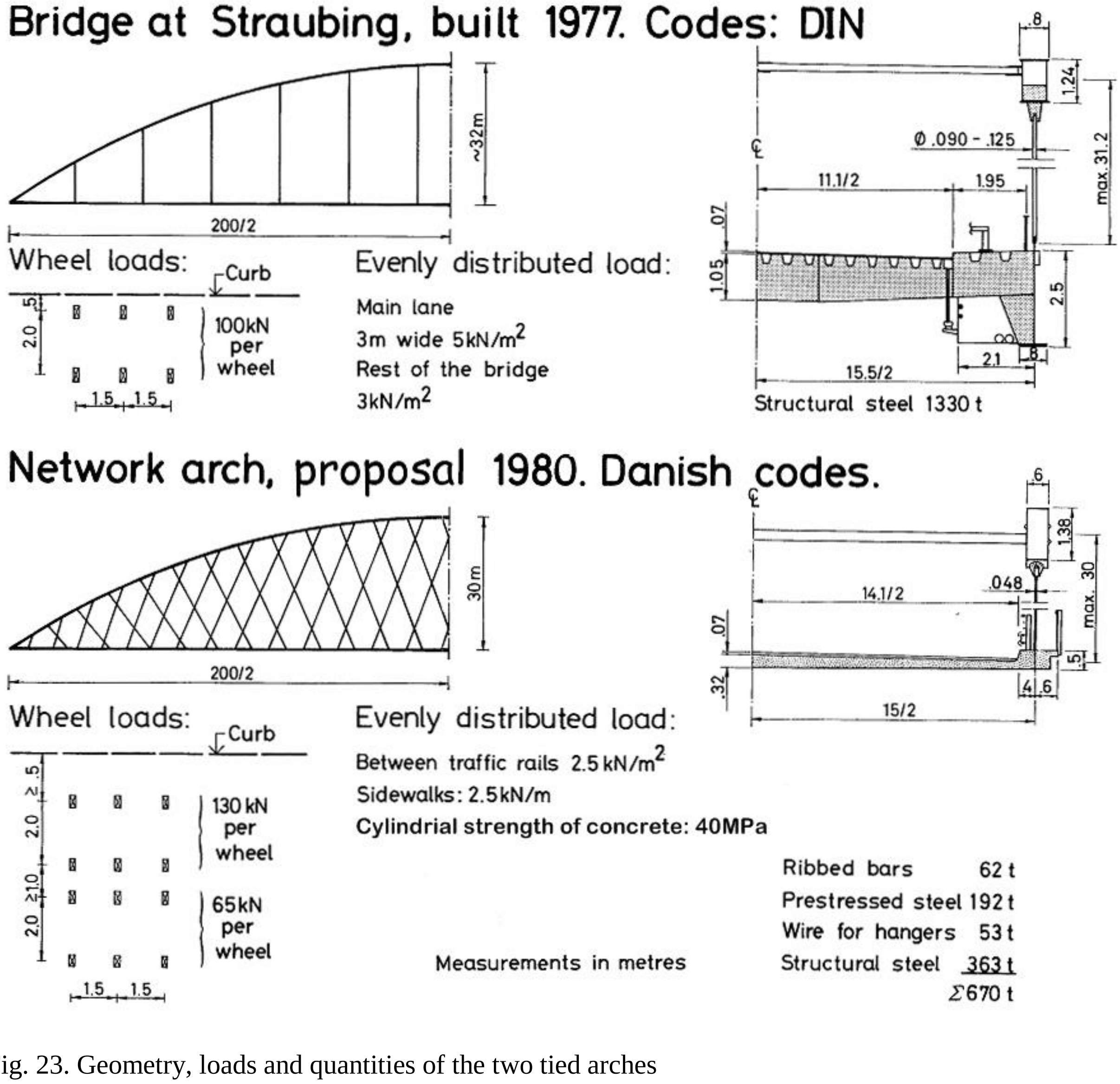

Fig. 23. Geometry, loads and quantities of the two tied arches

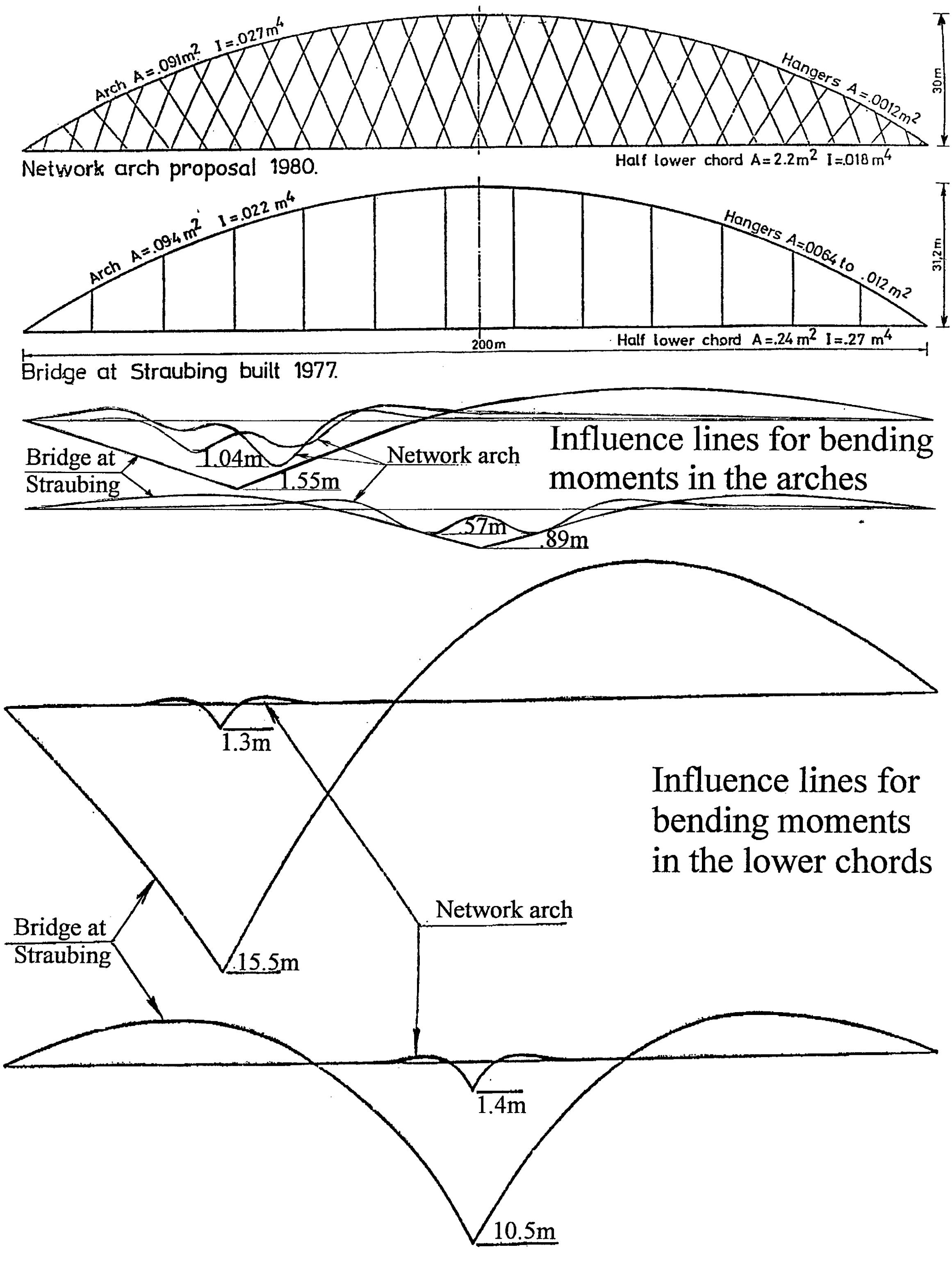

Fig. 24. Areas, stiffness's and influence lines for the lower and upper chord of two tied arches

The upper part of fig. 24 shows influence lines for bending moments in the arches. The network arch usually saves more than half the steel compared with other bridges, but the steel weight for the bridge with vertical hangers is in this case only twice the steel weight of the network arch. This impresses the author because the Straubing Bridge uses no concrete in the deck.

When the arches are made of concrete and the hangers are vertical, it is important that creep does not change the shape of the arch over the years. Therefore the shape of the arch should be near to a second degree parabola. When the arch is made of steel and the hangers cross each other, the arch should have a constant curvature except, maybe, near the end. That would lead to more even maximum bending in the chords.

If the shape of the arch of the Straubing Bridge had been more like a circle, the ordinates of the influence line for the bending moments in the chords could have been more equal. Now, when the arch is nearly parabolic, the bending in the middle of the span is smaller than in the quarter points.

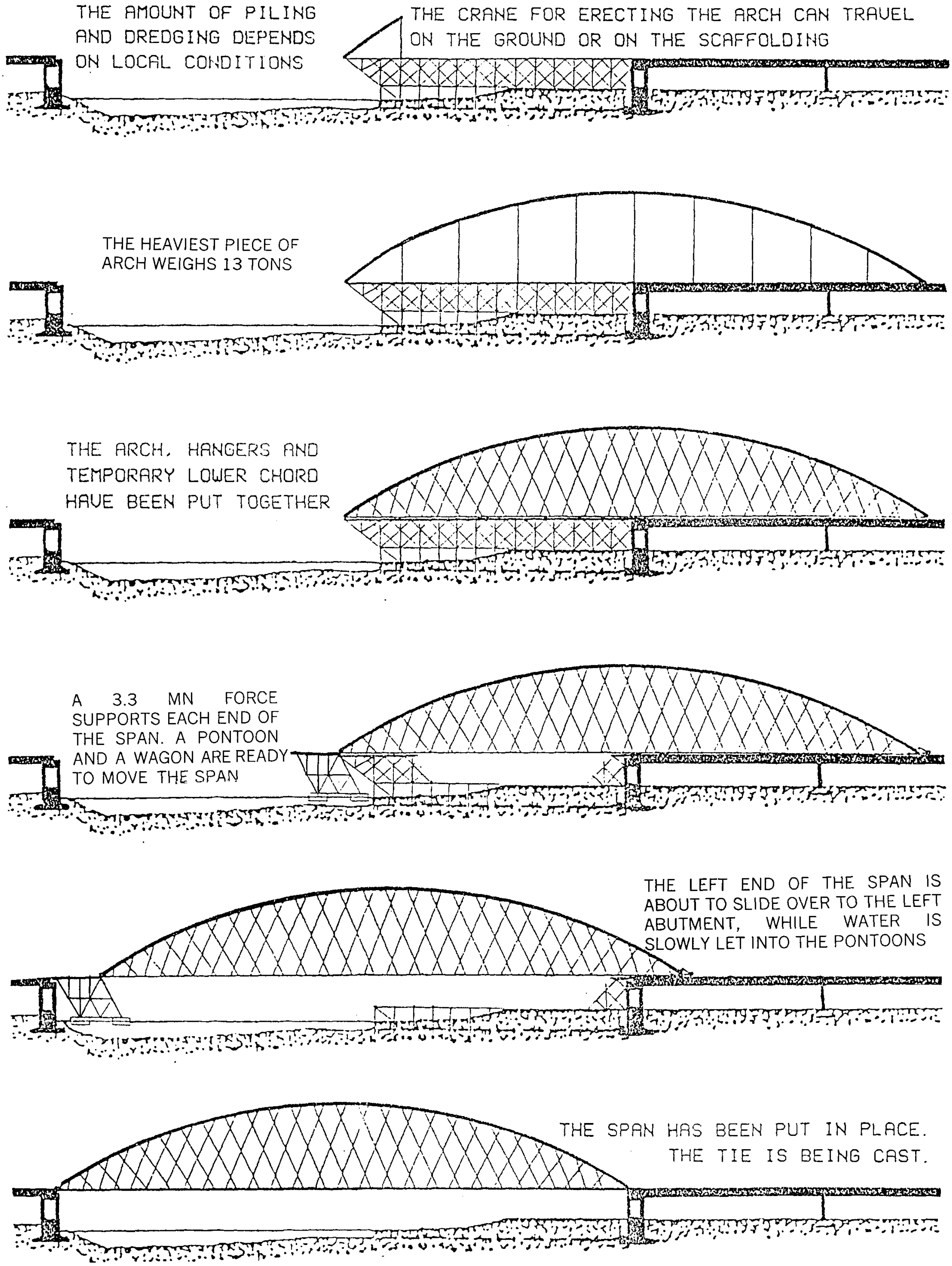

Fig. 25. Erection procedure for a network arch spanning 200 metres

Fig. 25 shows how a network arch bridge can be erected on site at Straubing. The costly and complicated adjusting of hangers can be avoided if the arch, hangers and the temporary lower chord have the correct shape and no unnecessary stresses when erected on the side-span. A wagon for moving the steel skeleton can roll along over the side spans. The side spans do not need strengthening to carry this wagon. After the span is in place, the steel crew has finished their job and the concrete workers can take over.

VERY LIGHT NETWORK ARCHES

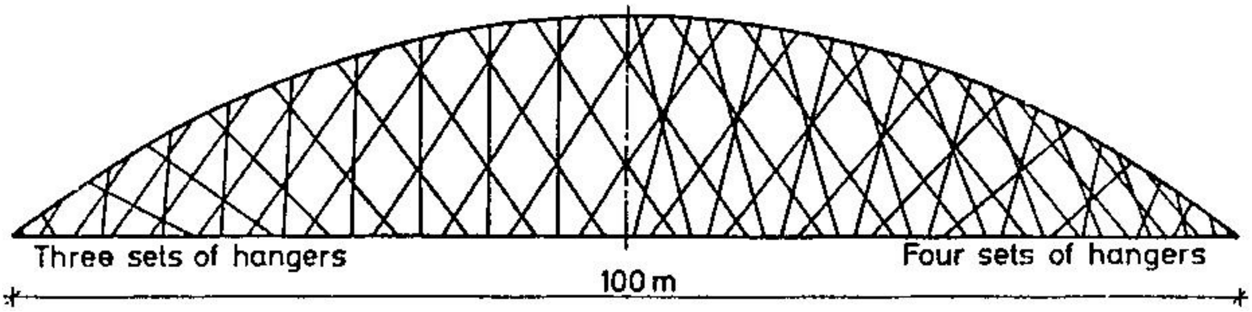

Fig. 26. Tied arches with various hanger arrangements

In special cases, for instance when there are very slim arches and/or big concentrated loads, many sets of hangers can be used. See fig. 26. Tveit 1984 b and c. If network arches are to support long-spanning flat roofs, hangers that go sideways out of the plane of the arch can ensure the sideways stability of the arch.

If three sets of hangers are used, the nearly vertical hangers have a tendency to attract too much force. To avoid this, the almost vertical set of hangers can be put in after the tie has been cast and before the asphalt layer has been laid. If four sets of hangers were used, it would probably be all right to put in half the hangers after the steel skeleton is in place. If four sets of hangers were used, more than three sets of hangers would have to relax before serious bending in the chords started.

The bailey bridges can be used for spans up to 60 m. For temporary bridges with spans of 60 to 120 m many sets of hangers can be used. The same parts of chords and floors can probably be used for all spans.

The idea of making the arches from thin-walled steel tubes to be filled with concrete can be used in network arches spanning 300 m. These can probably be erected using two floating cranes with a combined lifting capacity of 600 tonnes. This can be suitable in rivers and in places where bigger cranes are not available.

Conservative preliminary calculations indicate that the steel skeleton of a network arch with a span of 150 m and a 10 m wide lane can weigh 114 tons. Two or three military helicopters can probably lift this, but the Russian and the American military keep the lifting capacity of their helicopters a secret. According to Guinness Book of World Records 1995 a Russian helicopter lifted 57 tons up 6560 feet.

To make the world's lightest arch bridge, one would have to use an orthotropic steel deck as in the Straubing Bridge in fig. 22 on p.13. The low weight in the lower chord would lead to small slopes of hangers in order to get enough resistance to the relaxing of hangers. Three or four sets of hangers might be an economical way to keep the bending in the chords down.

THE FEHMARN SOUND BRIDGE AND SIMILAR DESIGNS

After his graduation the author got a grant to study in TH-Aachen for the academic year 1955 to 1956. The author had already found that he could save about two thirds of the steel used in arch bridges with vertical hangers. Nobody in Aachen was interested in arch bridges with inclined hangers with multiple intersection. Finally Professor Philipp Stein took pity on the author and helped him to build a simple model and discussed the network arch with him. There is more on this on pp. J-1 to J-3 in "Systematic Thesis on Network Arches" on the author's home page: http://home.uia.no/pert

When the author was building the bridge at Steinkjer, he heard about the Fehmarn Sound Bridge. See fig. 27 on the next page. (Stein and Wild 1965). At first the author thought that it was a coincidence that the Fehmarn Sound Bridge had inclined hangers with multiple intersections like the bridges in figs 28 and 29. Ten years later he found that Professor Philipp Stein had written the centenary history of Gutehofnungshütte. (Stein 1951).

The author wondered if his ideas on saving steel by using inclined hangers with multiple intersections could have been passed on to Gutehofnungshütte by Professor Philipp Stein. When asked about this in a letter, Professor Stein answered: "Dass ist durchaus möglich." (That might very well have been the case). The author was quite happy about his ideas being applied to a bridge much more complicated than anything that he himself could have designed at the time.

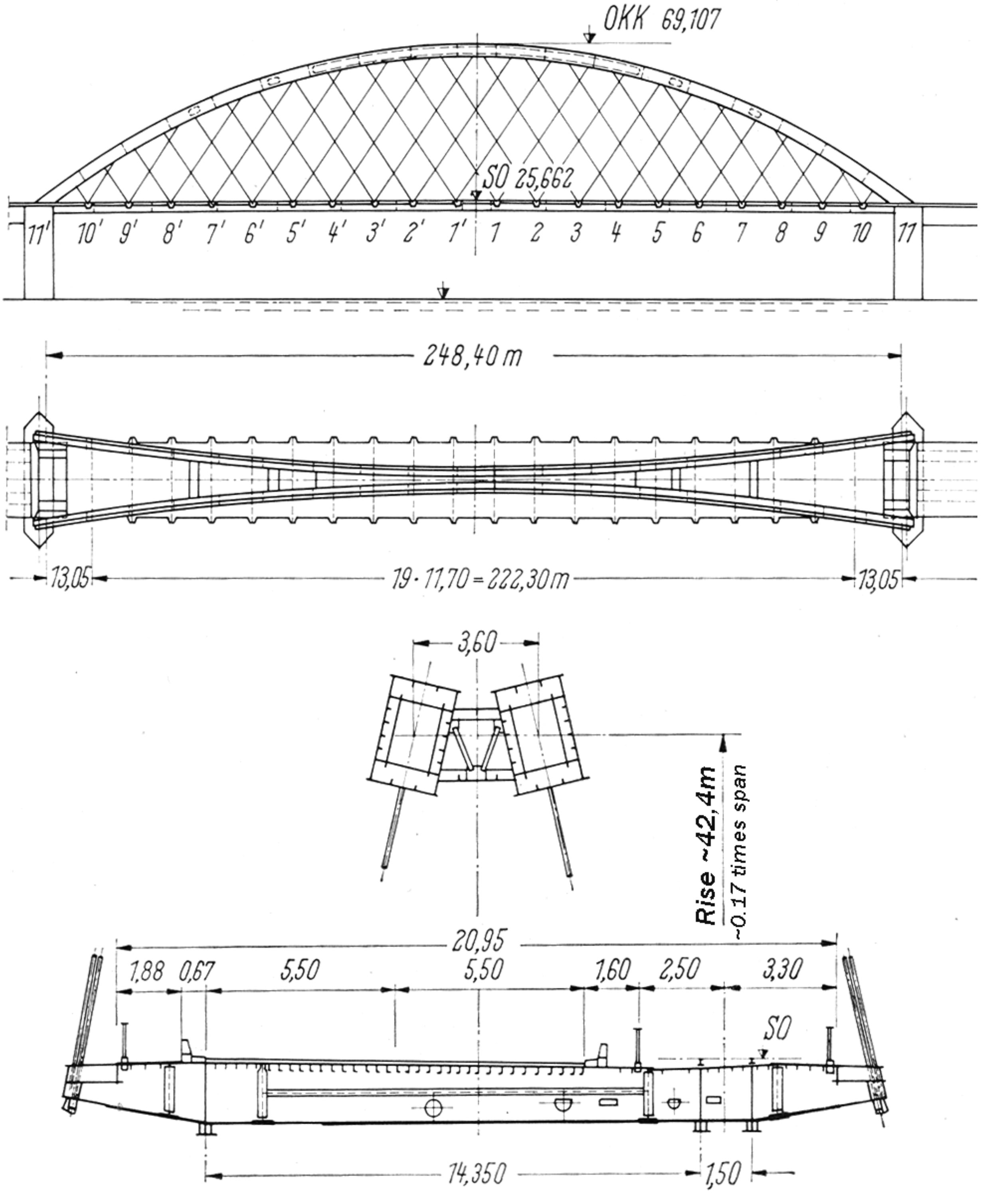

Fig. 27. The main span of the Fehmarn Sound Bridge. Opened in May 1963.

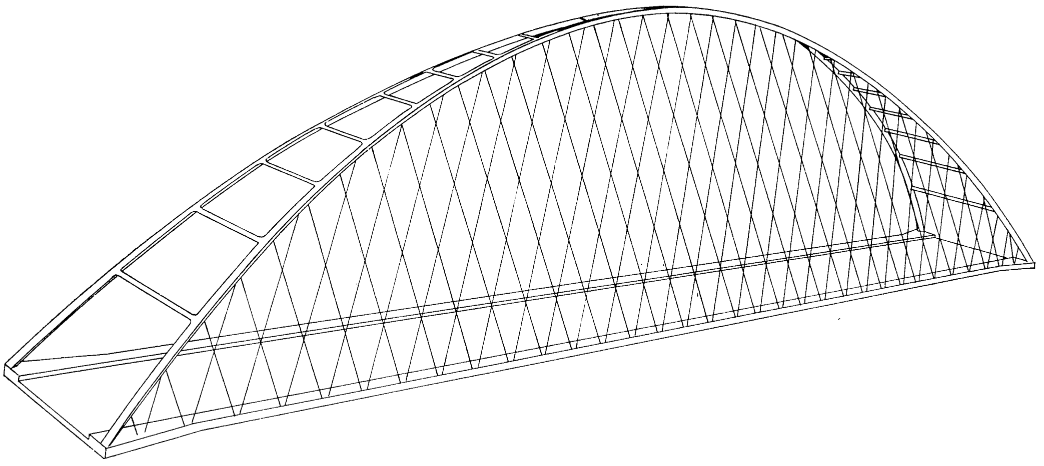

Fig. 28. Proposed network arch design from the author’s PhD thesis. Tveit 1959.

In fig 28 the arches slope toward each other. This reduces the bracing between the arches and the bending moments in the wind portal. It makes the slab or transverse beams in the tie longer. This leads to increased steel weight. At the time the author still suggested the constant slope of hangers and some nodes where two hangers meet. Now he would not even consider such arrangements.

Professor Masao Naruoka saw model tests on the Fehmarn Sound Bridge in TH-Hannover in 1960. Naruoka took the idea to Japan where it has been flourishing. (Naruoka 1977), (Fujiono 1965), (Hiroshi 1965) and (Tagai 1970). More than 100 bridges of this type have been built. (Kikuno 1973), (Yoshikava 1993) and (Nakai 1995). Many references to Japanese articles on network arches can be found at the end of (Tveit 1999a).

The Japanese have a small country and it is very important for them to make it more beautiful by building beautiful bridges. Many of their bridges resemble the heaviest bridge for the Åkvik Sound. See fig. 10, page 9. About half of their network arches have parallel arches. Nakai 1995. Most Japanese articles on network arches tell about spans with arches sloping towards each other. The Shinhamadera Bridge, fig. 29, was the longest network arch when it was opened. The Japanese call these bridges "Nielsen-Lohse bridges". They might not know that O. F. Nielsen never crossed the hangers in the bridges that he built. Nielsen 1930, 1932 and 1936.

In most Japanese network arches all hangers have the same slope. That was also the case in many of the bridges that Nielsen built in Sweden between the two world wars. In his bridges the hangers were supposed to relax due to live loads. The constant slopes of the hangers made the design of these bridges less complicated when Nielsen's method of calculation was used. Nielsen 30. See also p. 55. With modern methods of calculation it might be easy and more economical to vary the slope of the hangers. It is the author's impression that the Japanese might think that the constant slope of hangers looks best. If the arches slope towards each other, the hangers might look unsystematic, as if they had had varying slopes.

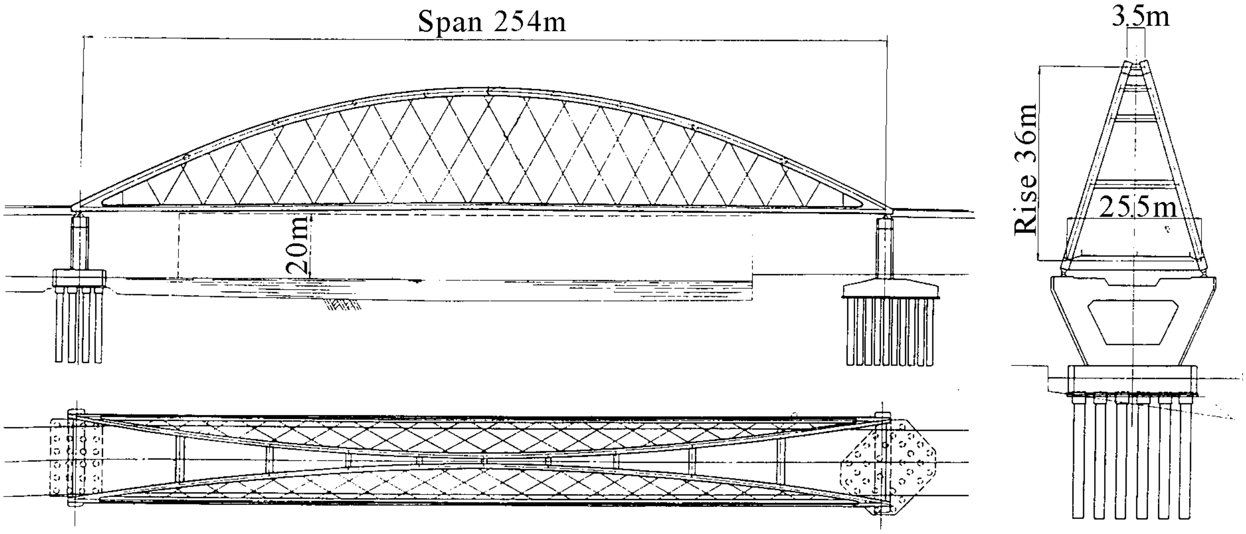

Fig. 29. Shinhamadera Bridge built 1991. (Yoshikawa 1993).

The arches in the bridges in figs 27 to 29 slope towards each other. That looks nice and the forces in the windbracing and the wind portal are reduced. The cost of the spans increases considerably because the span and the steel weight of the transverse beams in the lower chord increase. When the author was in Japan in 1998, he said to an engineer "It is all right for you in Mitsubishi Heavy Industries to make network arches that use three times as much steel as necessary as long as you have a client who is willing to pay for it". He politely refrained from answering.

Gimsing 99 shows many structurally dishonest bridges and concludes: "A bridge should be designed in such a way that structural function and efficiency are expressed in the form. Modern high strength materials should be used to make the bridge light and graceful, and not to shape the bridges without considering the structural function." The author supports this point of view.

NETWORK ARCH IN PROVIDENCE ROHDE ISLAND

A network arch has been built in Providence, Rhode Island. See fig. 30. It was opened in 2007. Fig. 31 gives an architect’s impression of the bridge. The span is 122 metres. Three parallel arches are used because the distance between the two outer arches is 50 m. Because of the width of the bridge, the lower chord could not be a simple concrete slab. Instead transverse beams under the deck have been used. There is only one hanger at the end of each transverse beam.

There is more on the network arch in Providence on pp. H-5 to H-7 in “Systematic Thesis on Network Arches” the author’s home page: http://home.uia.no/pert under the button “Systematic Theses”. The steel skeleton was built on a quay. It was floated 20 km up the bay and put on its piers in the spring of 2006. The History Channel made a program that showed how the 2200 t of steel were moved. Afterwards the concrete slab was cast.

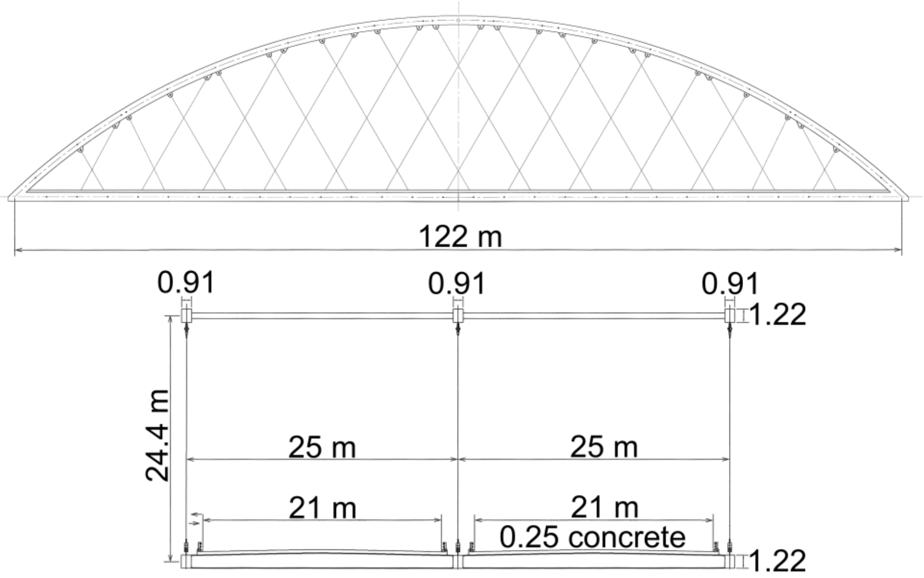

Fig. 30. Network arch in Providence Rhode Island, USA

Fig. 31. Network arch in Providence. Artist’s impression.

Fig. 31a shows the steel skeleton of the network arch at Providence before it is floated to the site

Fig. 31b. Bridge over the Ohio River in the USA. Opened 2007. Span 268 m.

In 1996 W. H. Hess presented “An Alternate Hanger System for Tied Arch Bridges” at the 13th Annual International Bridge Conference in June 1996 in Pittsburgh, Pennsylvania. Hess 1996. It was an independent idea of his, but he recognised the author’s work on network arches. Michael Baker Jr., where he worked suggested network arches for many bridges. Finally the idea was adopted for the Blennerhasset Bridge. (Wollmann and Zoli 2008) contain much interesting information on the design. There is a three page description of the Blennerhassett bridge on the author’s homepage http://home.uia.no/pert under the button “Systematic Theses” pp. H-23 to H-25.

The main span in the Blennerhassett Bridge was erected from pillars in the river. See fig. 31c. The distance between the pillars allowed ships to pass. Wollmann and Zoli 2008 say that “compared to a bridge with vertical hangers the crossing hangers reduce the live load deflections by a factor of 11. Arch rib and tie beam bending moments are reduced by a factor of 4 and 5 respectively.

There is 32.6 m between the planes of the arches. With the great width of the bridge and the correspondingly heavy concrete deck slab, live load stresses in the inclined hangers remain low and hanger unloading is not an issue. The design was accepted because it saved a lot of money. The Blennerhassett Bridge won the 2009 “National Award for Long Span Bridges” from The National Steel Bridge Alliance.

Fig. 31c shows a stage in the erection of the Blennerhassett Bridge

TWO UNUSUAL BRIDGES AND HOW THEY COULD BE ERECTED

The author would like to show two ideas for the design of network arches. The first one is illustrated in fig. 32. It shows the first stage of erection and transport of a skewed bridge across a canal.

The angle between the bridge and the canal is 45 degrees. The span is 100 metres. The width of the canal is nearly 70 metres. In order to reduce the thickness of the concrete slab the bridge has three arches.

The structural steel, supplemented by a temporary lower chord, is erected on the side-spans at one side of the canal. If the shape of the steel skeleton is right, then no adjustment of hangers is needed later.

While the beams on top of the pontoon are tied to the abutment, the steel skeleton is rolled to the middle of a pontoon. Then the pontoon is pulled across the canal. Finally the steel skeleton is rolled onto the abutments at both sides of the canal and the tie is cast.

Fig. 33 shows a suggestion for a bridge in Skodje in Norway. Very few ships will pass under the bridge, so the low parts of the arches could be allowed above the navigable waters in the fjord. Since there is little tension in the tie, it is possible, but probably not advisable, to omit the prestressing cables.

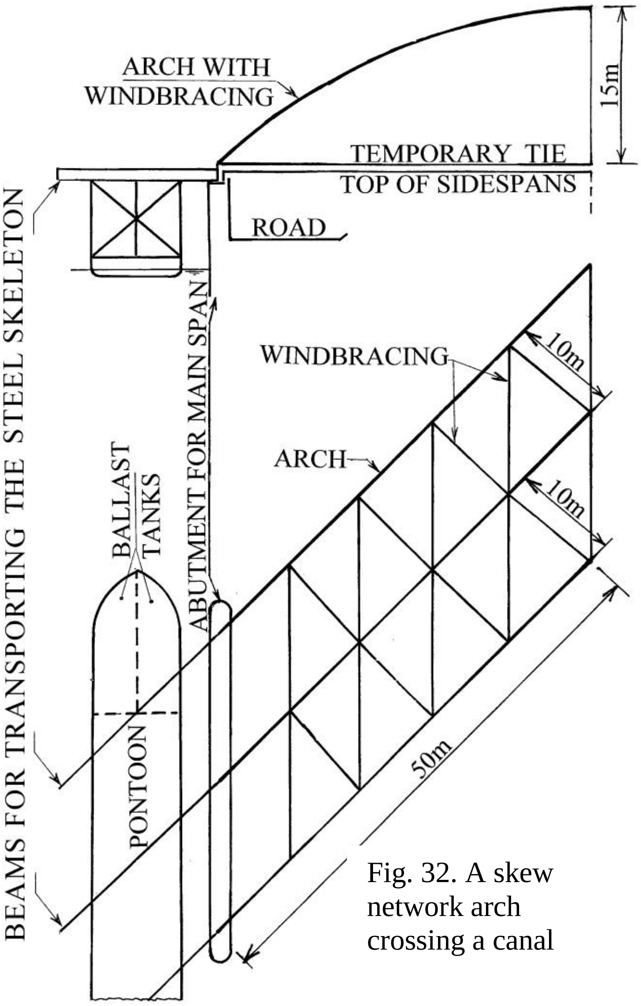

Fig. 32. A skew network arch crossing a canal

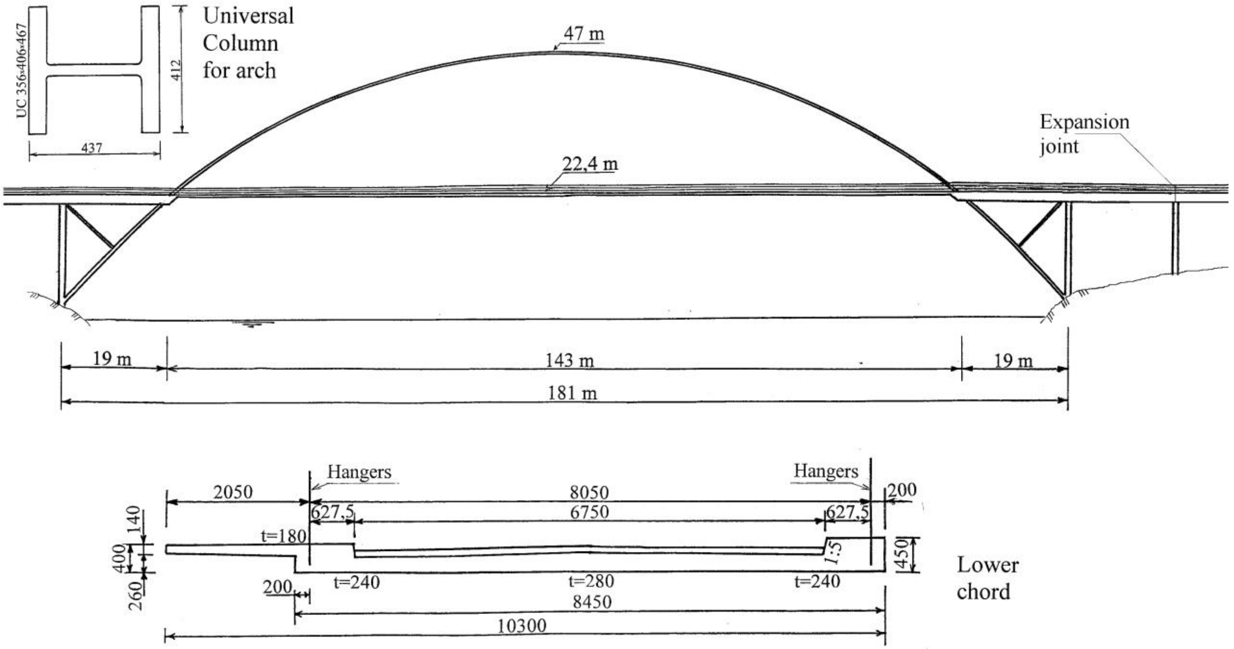

Fig. 33. A suggestion for a network arch bridge across Storestraumen in Skodje in Western Norway

The tubular parts of the arches under the lane could have been floated in or erected from the side-spans. The structural steel above the lane, supplemented by a temporary lower chord, could have been erected on side-spans on one side of the fjord. See figs 21 and 22, p.12. Then it could have been floated across to the other side of the fjord by means of a floating crane or a pontoon. It could also be lifted across the fjord by a mobile crane.

Fig. 33a shows the reinforcement in the edge beam nearest the footpath. The capital letters indicate the sequence in which the reinforcement is to be put in place. The longitudinal prestress reduces the need for longitudinal reinforcement. In fact there will be no transverse cracks in the slab in the serviceability limit state.

The longitudinal prestress will increase the bond in the transverse reinforcement. This leads to smaller distances between the cracks in the longitudinal direction of the bridge, especially half way between the arches. However this beneficial effect has not influenced the author’s choice of transverse reinforcement in the slab.

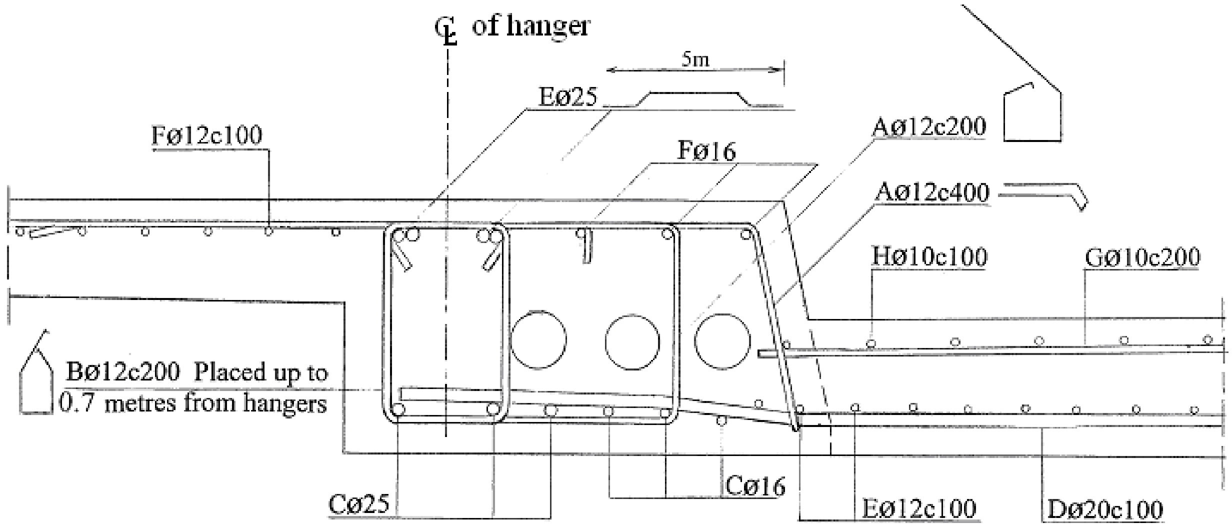

Fig. 33a. Reinforcement in the edge beam nearest to the footpath in the proposed Skodje Bridge

There is more on the erection on the side-span and the removal of the temporary lower chord in: “Erection of the steel skeleton of the network arch on the side span of the Skodje Bridge” and in “Removing the temporary lower cord of the Skodje Bridge.” See pages 50a to 53a.

In general the bridge authorities have a considerable influence on the type of bridge chosen. The author was very pleased when Professor Günter Ramberger, after the lecture in Vienna in March 2000, said: “If design alternatives from firms have been invited and the network arch has the lowest price, it would be hard to avoid accepting it if it is technically in order. This applies to the whole of the EU”. Norway, however, is not a member of the EU.

A committee decided to build a bridge with the whole arch under the lane. See fig. 33b. It will never be known how much less the author’s network arch would have cost.

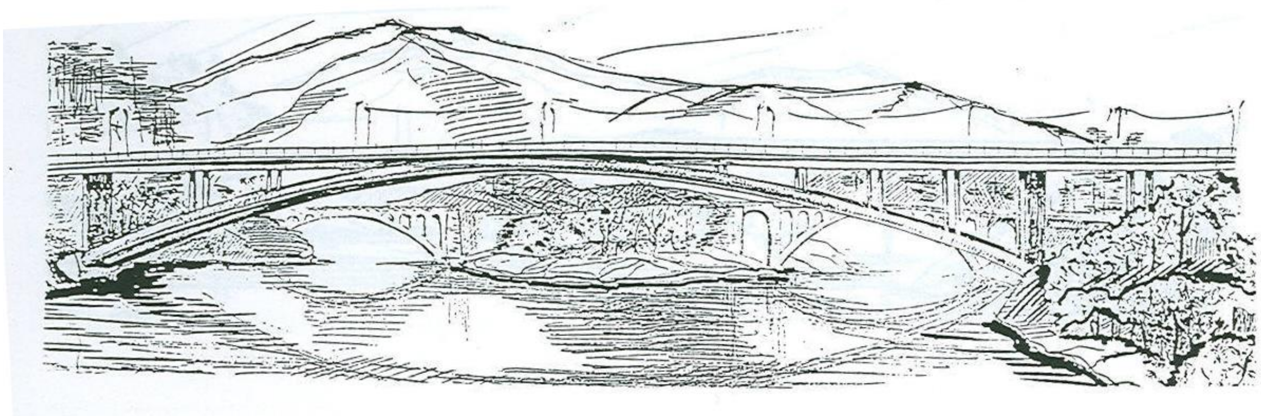

Fig. 33b. This arch bridge was built over Storestraumen in Skodje in 2000

QUESTIONS AND ANSWERS

During his lecture tours the author has been asked many good and relevant questions. Some are answered here and some have influenced the text in other parts of this publication. If somebody has questions that have not been answered, the author would be very happy to answer. The author would like to include the answers in the internet edition of this publication. The address is: “per.tvet@uia.no”

Q: Why have more network arches not been built?
A: The short answer is: The author does not know. An obvious explanation might be that optimal network arches are not economical. However, the author is not willing to accept this explanation and will try to come up with other reasons.

As you can see from the list of literature on pp. 95 to 102, efforts have been made to draw attention to this very promising type of bridge, but for a long time interest was very limited. Part of the reason might be human nature. Back in the fifties a speaker in the student’s society in Trondheim said something like this: “You might have heard about the agility and outstanding achievements of the human spirit. The truth is that the human spirit is slow, backward and utterly conservative.”

All design offices have a shortage of engineers that can be trusted with the design of network arches, and these engineers have many other tasks that have high priority. For a firm it might previously not have been economical to find out all about network arches to design just one bridge. After the establishment of the EU this might have changed. See Professor Ramberger’s statement on page 20a.

Network arches require co-operation between steel firms and concrete firms. The firms might have less motivation to co-operate because network arches use little steel and little concrete. Bridge authorities have better reasons for building network arches, but the introduction of the network arch would create extra work for them. If the bridge authorities do not promote the network arches nobody else can.

A man of great experience in bridge building, Director Man-chun Tang of T. Y Lin International, worked on the Fehmarn Sound Bridge when he was a young engineer. About 40 years later he told the author that in his experience with long spanning arch bridges the dead-load/live-load ratio was so big that it does not pay to use inclined hangers. The problem of erection also speaks against the network arches. After he had seen fig. 101 of the Brandanger Bridge he said that he would like to design a similar bridge.

In the author’s opinion increasing loads, stronger building materials and suitable methods of erection will favour inclined hangers for long spans, and even more so in the future. The network arch is more competitive for spans where the distance between the arches is less that 15 to 18 m.

In hindsight one might wonder why the author was allowed to build the first two network arches. The bridge at Steinkjer was built because the town engineer thought that promising ideas should be helped along. He thought that it would be safe to build a network arch because Professor Arne Selberg supported the idea.

At that time Professor Selberg was the number one bridge expert in Norway. He thought that network arches should be built, but the bridge office of the Norwegian Public Roads Administration was sceptical. Then the author’s mother went to Oslo to talk to her brother about her son’s fascination with a very promising type of bridge. The author’s uncle was permanent secretary to the minister of transport.

In his naivety the author never spoke to his uncle about the network arch, because he thought that everybody would support such a promising idea. The author does not know if his uncle ever spoke up for the network arch, but all of a sudden it was decided that the bridge over Bolstadstraumen might be a network arch. After his uncle retired, the author was not allowed to build any Norwegian network arches for over forty years.

The two Norwegian network arches on pp. 5b to 7a were built because they were less costly than competing alternatives. Designs like the network arches on pp. 9 to 12 and fig. 97 on p. 93 would be more cost efficient. If the low cost of maintenance is considered, the optimal network arch would be even more cost efficient.

The building of optimal network arches can bring great savings. Considering the great poverty in the world, it would be morally wrong not to use them at suitable sites. General conservatism is probably the main obstacle to the use of this very promising structure.

Q: How about the effect of the breaking of hangers?

A: The hangers should be well protected by guard rails. If hangers break nevertheless, many hangers will have to be broken at the lower chord before the bridge is endangered in the collapse limit state. This is because hangers that have their lower ends near to each other at the lower chord have their upper ends well spread out at the upper chord. Thus the arch will not collapse until very many hangers are broken. Near the end of the arch the hangers are not so well spaced, but here the arches are stronger.

Tension in the prestressing cables will prevent a rupture in the lower chord till a lot of hangers are broken. Bending capacity and tension in the deflected state will prevent the breaking of the lower chord. Collision between lorries and the superstructure is a problem whenever structural members are above the lane. It is not much more serious in optimal network arches. Zoli and Woodward 2005 come to the same conclusion after having done a thorough dynamic examination of the effects of the breaking of hangers.

For the author’s dissertation in 1959 he built a model of a road bridge spanning 100 m. He did some tests on removing hangers and concluded: “Only when a very high number of hangers were missing or the load was extremely big, would we get buckling in the arch and collapse of the whole structure.”

The hangers of around 60 Nielsen arch bridges built in Sweden were steel rods. See p. 55. Ostenfeld 1976 page 124. They were meant to relax due to one-sided loads. Nielsen 1930, 1932 and 1936. Once the author asked a very experienced engineer at the bridge office of the public roads in Sweden: “How do you repair hangers in the Nielsen bridges if they break?” He seemed surprised by the question and said that he had never heard of the hangers in the Nielsen bridges breaking.

In the early sixties the author heard of a hanger in a Nielsen bridge breaking. He does not know if this was due to fatigue or other reasons. If a steel rod hanger in a network arch of the Åkvik Sound type broke due to fatigue, the author would elongate the hanger by thermostatically controlled heating in a metal casing around part of the hanger, and then weld the hanger in such a way that the original length was maintained.

Q: How do you prevent the hangers from vibrating in wind and rain, and how do you prevent them from banging against one another?

A: In the two Norwegian network arches one of the hangers has been covered by a slit-open plastic tube where hangers cross each other. This prevents damage to the hangers if and when the hangers bang against each other. This arrangement has worked well for 50 years. It is advantageous that the length of the hangers and the distance between the points where hangers cross each other are not constant. That gives many unequal periods of vibrations and more dampening. Where the hangers cross, they could be tied together, for instance, by the kind of bands which plumbers use to hang up water tubes or by plastic bands used to tie the arms of prisoners in war zones. This arrangement would also contribute to dampening the vibrations in the hangers.

Q: What about fatigue in hangers?

A: The Åkvik Sound Bridge was proposed for a sound between two islands that have populations of 1900 and 1600 respectively. Since the traffic between these two islands will be moderate, fatigue in the hangers is not a problem. Network arch bridges with more traffic will use more steel in the hangers. The steel weight of the hangers in the Åkvik Sound Bridge is 16 tons. This is 8% of the total steel weight. Even a very unlikely doubling of the steel weight in the hangers would not make the network arch considerably less competitive.

(Stephan Teich 2011), handed in his Dr.-Ing. thesis in TU-Dresden.(ISSN1634-6934) (http://www.qucosa.de/fileadmin/data/qucosa/documents/8604/Dissertation_Teich.pdf) He goes very deep into the field of fatigue of hangers. (Benjamin Brunn and Frank Schanack 2003) have done interesting work on fatigue in hangers and hanger arrangements that improve resistance to fatigue.

In his master’s thesis Steimann 2002 pointed out that hangers made of flat steel were preferred by the German railway company. Graβe 2007 p.195 stresses that hangers made of flat steel plates are simpler to produce and have higher fatigue strength. However, they might not look as good as round hangers.

Q: How does the author suggest putting the hangers in place?

A: The hangers are put in after the arches and the lower chord are in place. If the hangers are steel rods they would usually be put in, resting in a long channel profile that is lifted by a moveable crane.

Q: What is the earthquake resistance of the network arch like?

A: Good, because of the high strength to weight ratio and ample reinforcement in the edge of the tie. Professor Semih S. Tezcan at Bogazici University in Istanbul says: "Since it is very light, the network arch is ideally suitable for earthquake prone regions. There is practically no problem. In the author's home page http://home.uia.no/pert under "Specialised Information" there are two pages on calculation of an earthquake's effect on network arches written by Professor Tezcan.

Q: What spans do you recommend in future network arch bridges?

A: For highway bridges spans up to and over 300 metres are recommended. For spans over 200 metres one would probably use box arches or tubes that are filled with concrete. For the Brandanger Bridge on page 94 a round tube has been used for a one lane span of 220 m. For railway bridges recommended spans would be smaller, maybe between 50% and 70% of the lengths of spans recommended for highway bridges.

Q: Are the network arches in danger of being subject to harmful vibrations due to wind?

A: The short answer is no. Arch bridges with vertical hangers are not known to have harmful vibrations of a whole span due to wind. Furthermore network arches are more like trusses. They are lighter and much stiffer than arch bridges with vertical hangers. The slim lower and upper chords are aerodynamically more favourable than the usual chords in bridges with vertical hangers. Thus network arches are unlikely to have harmful vibrations.

Professor Erik Hjorth-Hansen of NTNU, Trondheim, Norway adds: If you have modest dimensions of arches and tie, there will be no dangerous organised vortex wakes and I see few and small dangers. For vibration of a network arch with a span of 220 m see page 94.

The author has been writing about this question in Tveit 1966 and Tveit 1992 and in other publications. He hopes that somebody who has been working on the vibrations of suspension bridges soon will examine vibrations in network arches. Yoshikawa, 1993, see page 18, found that the aerodynamic vibrations of the Shinhamadera Bridge were not dangerous. Professor Van Bogaert of the University of Gent calculated wind effects on the Brandanger Bridge and found that forces due to wind was no problem. See p. 94.

Q: Could a box profile be used for the arch instead of the universal column?

A: Yes, one would have to do so if the axial force in the arch is too big for the universal column or an American wide flange beam. The hollow welded arch does cost more than arches made from universal columns. If a hollow arch were used, the joints between the arch and the windbracing (fig. 16) and the joints between the arch and the hangers (fig. 17) would also be more costly. Furthermore a box would be less slender and have a less favourable stiffness distribution in the horizontal direction. See page 25.

Q: Where does the optimal network arch compete best?

A: The network arch probably competes best for spans between 100 and 200 m. In railway bridges slightly shorter spans might be very competitive. The network arch can be used for spans up to and above 300m. The vertical reactions and the low weight are an advantage where soil conditions are difficult. With a high strength to weight ratio the optimal network arch is suitable for seismic regions. The network arch is a very stiff structure. That gives smaller vibrations due to wind. Small deflections are important in railway bridges.

The optimal network arch has advantages in flat terrain where there is little room for members under the lane. The slim tie leads to shorter ramps. This is more important in rail than in road bridges because the slope of rails is smaller than the slope of roads.

The network arch is advantageous over navigable water where cranes or pontoons are available for lifting the steel skeleton of the network arch in place. This is especially so in coastal areas where big floating cranes are available. For many spans over navigable water concrete network arches can be cast on shore and be lifted in place by big floating cranes. See also page 94.

Since the network arch uses little steel, it is very competitive where the price of man-hours is small compared to the price of steel. This only applies when suitable manpower with a sufficient technological know-how is available. If the bridge is a through arch with navigable water underneath, then the part that is above the lane can be a network arch. The steel skeleton for this part can be lifted in place from pontoons. Pp. 15, 54 and 94.

Q: What are the drawbacks of the network arch?

This question was put to the author during a lecture in Kosovo in 2008. He could not remember any drawbacks. He should have answered: It is difficult to give horizontal curvature to spans of network arches, but Santiago Calatrava can do it. Like many structures the network arch has structural elements above the lane. They can be ruined by straying vehicles. See also Zoli and Woodward 2005.

Here comes a question that the author posed during his lecture tour in 2000.

Q: When the author visited Bundesanstalt für Straßenwesen in Bergisch Gladbach near Köln, he asked if they were likely to accept the railing that is shown in fig. 34 outside the hangers of a network arch. The railing can also be seen in figs 6 and 6a of the network arch bridge at Steinkjer. Tveit 1964.

To give the pedestrians a feeling of safety since they were near to the edge of the bridge, the top of the railing is 130 mm wide. Where the railings are outside the main span, vehicles can not hit them. The railings are without expansion joints in the main span.

The posts of the railing are welded to U120-profiles cast into the outer edges of the footpath. The welding was done in small steps to avoid too much heating of the concrete.

To avoid harmful stresses due to temperature differences, bending and creep in the lower chord, the grid outside the footpath is fastened to the handrail, but not to the vertical posts. If a shortened tie gives much horizontal deflection in the posts, the handrail could also be shortened. There has been no shortening in the tie since the concrete was half a year old.

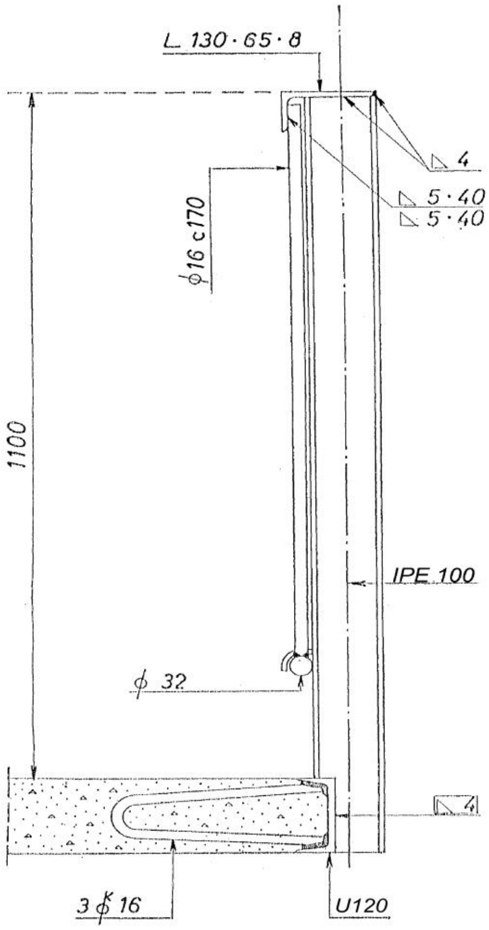

Fig. 34. Cross-section of the railings of the bridge in Steinkjer. Figs 6 to 6c.

A: It is unlikely that such a type of railing would be accepted. - This did not come as a shock to the author because the Norwegian bridge authorities have said the same. Since the railing of the Steinkjer Bridge has worked well since 1963, the author would like to suggest a safe way of testing the Steinkjer type of railing.

If a railing of the Steinkjer type does not work, it could be replaced by the concrete elements to which a usual railing is often fastened. The design would have to have extra space in the footpath for the usual concrete elements for fastening the standard railings and possibly extra strength to carry the weight of a heavier railing.

In 2003 a student from TU-Dresden in Germany, Frank Schanack, was doing his Master’s thesis in Grimstad. Brunn and Schanack 2003. He told the author that he had been working on a bridge where the outer railing was fastened to screws that were jutting out of the concrete slab under the footpath. There was an inner railing between the traffic and the footpath so that the traffic could not hit the outer railing. In the main span of the Steinkjer Bridge the hangers are between the traffic and the footpath. All this indicates that a railing like in fig. 34 might sometimes be accepted.

The next chapter might be skipped during the first reading. The placing of the hangers can be done according to: “On Network Arches for Architects and Planners.”
See fig. 13a and fig. 47. The document can be found at http://home.uia.no/pert/index.php/My_Publications

COMPARISON BETWEEN UNIVERSAL COLUMNS, TUBES AND BOX SECTIONS

Fig. 34a shows two box sections with the same areas as the universal column that could be used in the arch of the bridge like in fig. 97. They are meant to illustrate the pros and cons of the choice of arches made of universal columns, box sections and tubes. The box section in the middle has b/t=31.25. If it had been used in the bridge in fig. 97 the bridge would not have been so slender. The lower end of the hollow sections could be filled with concrete to make them stronger and more resistant to shocks from vehicles.

The box to the right in fig. 34a has the same distance between the outer corners as the universal column that could be used in the arch of a bridge like in fig. 97 on p. 93. If had been used in the arch of a network arch, it would have looked nearly as slender as the arch in fig. 97, but it is not practical.

Fastening windbracing and hangers to the box sections would be less straightforward. If universal columns are used most of the material is in the flanges. This gives great sideways stiffness. Advantages of the universal columns are less welding, smaller dimensions and simpler details. This speaks for using universal columns and American wide flange beams in the arches of network arches.

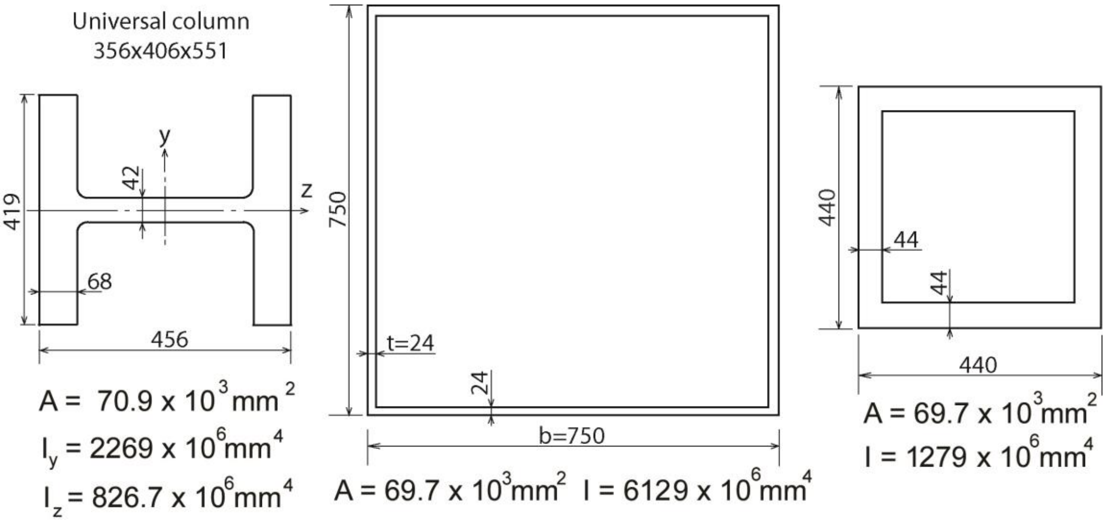

Fig. 34a. A universal column compared to two box sections with the same area

The high wind force on the universal column speaks for using tubes in narrow network arches. The wind force on the biggest cylinder in fig. 34b is only about 1.3 times as big as the force on the universal column. The two tubes in fig. 34b have the same area as the universal column that could be used in the arch of a bridge like in fig. 97. Also the tube in the middle has a cross-section of class 1. The whole cross-section can have quite a lot of yield before local buckling occurs. The tube to the right in fig. 34b has the same diameter as the diagonal of the universal column to the left. The author prefers the slim looks of network arches with universal columns or similar American wide flange beams in the arches. Tubal arches that are filled with concrete soon after erection, is an alternative that deserves examining.

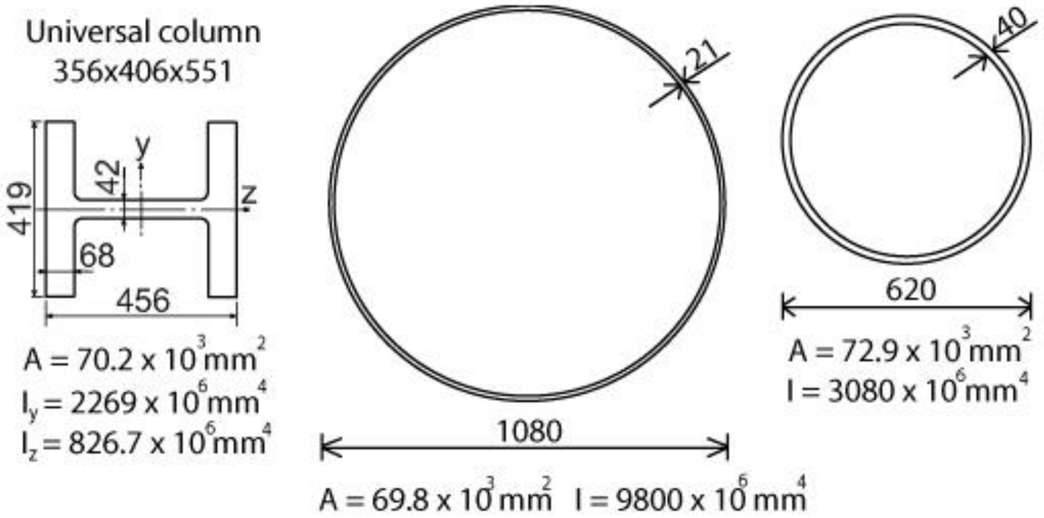

Fig. 34b. A universal column compared to tubes with nearly the same area.

WHERE MIGHT NETWORK ARCHES WITH A CONCRETE TIE BE AN OPTIMAL SOLUTION?

The slender network arches are beautiful and cost efficient bridges. They are especially cost efficient when the distance between the arches is less than 15 m. Then no transverse beams are needed in the tie. Longitudinal steel beams are not needed because the longitudinal bending in the tie is smaller than the transverse bending in the middle of the concrete slab between the arches.

When there are no transverse beams in the tie the tensile force is best taken by prestressing cables in edge beams under the arches. They give a beneficial compression in the concrete in the tie, especially when there is no load on the bridge. Longitudinal steel beams in the tie would attract compression. That would give higher stresses in the beams and increase the need for minimum longitudinal reinforcement in the tie. When there is a small distance between the traffic over the bridge and the necessary room for the river below, a network arch with a slim lower chord might be a good alternative.

Fig. 98 p. 93 shows that little steel is needed in the Åkviksound network arch compared to German arch bridges with vertical hangers. The reduction of the steel weight is much smaller when arch bridges with vertical hangers are replaced with network arches with steel ties. See the Flora Bridge in fig. 40i on page 35. Pp. 93a to 93c indicate that sometimes 35 to 45 % of the cost can be saved by using network arches with concrete ties.

The possibilities of erection play an important role in the choice of bridge type. It is relatively straightforward to use network arches when they can be built on a temporary scaffold. See pp. 6b and 7a. In Peru the current can move the sand away from around pillars in some rivers. There network arches can be a good solution in spite of the relatively long spans. An interesting method of erection for the Blennerhassett Bridge over the Ohio River is shown in fig. 31c on page 19a.

If temporary ties are used, they form a stiff skeleton with the arch and hangers. See pp. 12 and 29k to 30a. The skeleton for small and medium spans can be lifted in place by mobile cranes. (Bechyne p. 92c). For bigger spans floating cranes, pontoons or barges can be used. See pp. 15, 20 and 29k.

In coastal areas complete spans over 300 m can be finished on a quay and lifted in place by big cranes. Floating cranes with a lifting capacity of 3000 to 7000 t exist already. The big cranes are mainly used for oil exploration. The main span of the Brandanger Bridge (pp. 93c to 94a) is 220 m long. It has only one lane. The wind speed of up to 50 m/sec is an important factor in the design. We can assume that in bridges with two lanes the wind will not give serious problems for spans of up to 250 m.

Generally it can be said that network arches are an alternative when long spans are needed. That is the case in deep rivers or straits, especially when pillars will be relatively costly. Network arches can tolerate relatively big settlement of the foundations due to poor soil conditions. In rivers where thick ice can occur most winters, the steel skeleton can be erected on ice and be lifted onto the pillars. See page 30b.

Network arches are insensitive to seismic activities because the deadweight is small compared to the load carrying capacity. See p. 23.

On big roads there are often two lanes plus a stopping lane in each direction. The two directions are often metres apart. In such roads two parallel spans can carry the road over obstacles. The two parallel spans would be lighter and easier to erect than one. If universal columns were used the very slender arches would look good. The same temporary lower chord could be used for both spans.

In many sites much more traffic can be expected in the future. Then it might be economical to build one span sufficient for carrying the present traffic. Two parallel spans should be planned, and the second span should be added when the first span is congested.

Whether network arches are cost effective depends on the site and to some extent on the equipment and the technical level of the work force available. A certain technical level is needed for the design and building of network arches. Good computer skills are a necessity. A dedicated and trained work force is needed to obtain the good quality control necessary.

It seems to the author that the network arch with a concrete tie might be the optimal solution for bridge spans between 40 m and up to and over 300 m.

MORE ON OPTIMAL ARRANGEMENT OF HANGERS.

After the second page this chapter deals with the relaxation of hangers. Most of it was written in cooperation with the American student Gene O. Day at the University of Houston in 1978. Tveit 1978. The author hopes that this chapter will make it easier to find hanger arrangements that lead to near optimal network arches.

Those who want a quick start at calculating a network arch can go to the articles on "preliminary design of network arch road bridges" on the author's home page http://home.uia.no/pert under the button "Supplementary Information".

Before going deep into explanations about hanger arrangements, the author would like to sum up the characteristics of an optimal network arch:

1. Aesthetic appearance.
2. Small bending in the chords.
3. No steel beams in the lower chord.
4. A distance between hangers that suits a light temporary lower chord for erection.
5. Equal cross-section and near maximum utilisation of tensile capacity in all hangers.
6. Hangers with slopes not causing too big bending moments in the chords due to relaxation of hangers.
7. Small and even distances between the nodes in the middle of the tie. This gives small and even bending moments in the tie.

Since the network arch is the slimmest tied arch bridge possible, it is likely to look nice. The network arch normally looks best if the rise of the arch is not over 0.16 times the length of the span. Steel beams in the tie would make the tie less slim and thus detract from the good looks. Steel beams in the tie are likely to cost more than the simple concrete slab tie.

When there is less than 15 to18 metres distance between the arches, the tie should be a concrete slab with longitudinal partial prestress. The author does not think much of steel beams in the tie when the distance between the arches is less than 15 m. The transverse bending in the slab is usually much bigger than the longitudinal bending. Thus the main purpose of the edge beam is to accommodate the hanger forces and the longitudinal prestressing cables.

For load cases that relax none or only very few hangers, network arches act very much like many trusses on top of one another. They have little bending in the chords. How many hangers that could be allowed to relax depend on the stiffness and bending capacity of the chords. Much bending capacity in the arch can better carry the extra bending moments that come when an increasing number of hangers relax. To avoid extensive relaxation of hangers, the hangers should not be inclined too steeply. If hangers do not relax, less steep hangers will normally increase the bending moments due to concentrated loads.

The network arches described on pp. 5b to 12 and pp. 56 to 94 are very competitive. The details are simple and the exposed surface is small. The steel weight is low, but not minimal. The arch and hangers supplemented by a light temporary lower chord can be moved. This steel skeleton can be erected on shore, on side-spans or on the ice between the abutments. When it is in place, this steel skeleton has enough strength and stiffness to support the casting of the concrete tie. In coastal regions network arches can be completely finished on shore and be lifted to the pillars by means of big floating cranes. If tubual arches are filled with concrete as soon as the steel skeleton is in place, lighter cranes can be used.

On pp. 93a to 93c there is a comparison between network arches and arch bridges with vertical hangers. Network arches spanning 150 m are compared to an arch bridge with spans of 100 m. In the network arch the cost per m^2 of bridge is between 35 % and 45 % less than in the arch bridge with vertical hangers.

For wide bridges, three or four parallel arches could be used to keep down the span of the concrete slab between the arches. See fig. 32, p. 20. For long bridges, where many spans are needed, the network arches could be made exclusively from prestressed high strength concrete. The spans could be made on shore and could be floated to the site on pontoons. See figs 49 and 50, p. 48.

If only one hanger in a network arch relaxes, it has little influence on the bending in the chords. The span still works primarily like a truss, and the increase in bending moments is small. When a few hangers relax the support of the arch is reduced. This leads to reduced buckling strength, but the one-sided load gives reduced axial force in the arch.

After part of the span starts to act like part of an arch with only one set of hangers as in fig. 37a, p. 29, increasing partial live load can make stresses increase faster than the same increase in live load on the whole span. This load case is especially dangerous when the chords are very slender. It will normally take a substantial increase in partial live load after a hanger has relaxed before the partial live load becomes as severe as the same live load on the whole span. See pp. 67 to 68.

The hanger arrangements in the two network arches on fig. 8, p. 8 and on pp. 59 to 72 might be a help in finding optimal hanger arrangements. The ratio of live load to dead load decides which network arch is the best paradigm. Look also at the network arch on pp. 73 to 93. Some very interesting work has been done in Brunn and Schanack 2003. Their work can be found at the author's home page: http://home.uia.no/pert under the button "Master Theses". See also Brunn and Schanack 2009

In the wind portal Brunn and Schanack use a reduced curvature of the arch. Here the radius of curvature is 80% of the curvature in the rest of the arch. This leads to shorter wind portals with smaller bending moments and more even, normal force in the arch. Brunn and Schanack's "Optimisation of the hanger arrangement" pp. 30 to 73 leads to recommendations in fig. 6.61, p. 69 in their master's thesis. See the author's home: page http://home.uia.no/pert under the button "Master Theses".

Hangers placed equidistantly along the arch give the smallest bending due to local curvature when the span is fully loaded. Two hangers at each nodal point would give more bending in the arch due to local curvature and less efficient support of the arch in buckling.

When hangers relax due to partial loading, it makes little difference whether hangers meet at the nodal points in the arch or not. When the nodal points are evenly distributed along the arch, the distance between some of the points of support doubles where some hangers relax. Then bending due to local curvature increases and the support of the arch becomes weaker.

However these load cases do not necessarily give maximum stresses, because load cases that make hangers relax give smaller maximum axial force in the arch. Because it saves design work and for many other reasons, it might seem best that the load on the whole span decides the dimensions of every point in the arch.

The optimal number of hangers is a central question in the design of network arches. Many hangers will increase the amount of man-hours in design, workshop and erection. This increase will, however, be moderate since all hangers can have the same cross-section and the hanger details are all alike. Many repetitions tend to keep the labour costs down. Many hangers also give lighter hangers and require lighter equipment for their erection.

More hangers could also lead to a lighter temporary lower chord for erecting the span. The edge beam is usually cast after the ends of the tie are cast and before the concrete slab is cast. This makes it easier to keep a constant distance between the transverse beams in the lower chord in spite of the uneven distance between the nodes in the tie.

Many hangers make it easier to replace defective hangers without interruption of traffic. This is because each hanger is lighter and the temporary removal of a hanger causes less extra stress. If there are many hangers, there is less chance that the breaking of one or more hangers caused by a vehicle will have catastrophic effects. See Zoli and Woodward 2005. The static effect of breaking of hangers is mentioned in Tveit 66. Fig. 96, p. 92 deals with the breaking of a hanger in the Norwegian version of the Åkvik Sound network arch.

Adjacent hangers at the deck are well spaced at the arch. Thus the network arch is probably less sensitive to the breaking of hangers than the usual bowstring arch. The author is not aware that breaking of hangers is an important cause of accidents in bowstring arches.

The hangers nearest to the ends of the arch tend to have smaller maximum forces than other hangers. This can be counteracted by increasing the distance between the hangers at the end of the span. When a temporary tie is used, the first hanger in the arch should normally be sloping away from the end of the span as shown in fig. 8, p. 8, fig. 12, p. 10, fig. 41, p. 39 and fig. 96 p. 92.

In the middle half of the span the nodes could be placed equidistantly along the lower chord. See fig. 8, p.8 and pp. 59 to 93. In the rest of the lower chord hanger distances should be varied in order to obtain nearly the same maximum force in all hangers. It is an advantage to avoid long distances between nodal points because these tend to lead to the biggest bending moments in the tie. See influence lines in fig. 65, p. 60. Since the longitudinal bending moments in the tie are small, this might not be a primary concern.

It deserves to be emphasised again that the bending moments due to concentrated loads can normally be reduced by making the hangers steeper. Too steep hangers lead to too much relaxation of hangers. See also page 16. For this reason a fair amount of this section will be devoted to the relaxation of hangers and a reasonable choice of slope of hangers.

The network arch where hangers relax is a discontinuous system, where each combination of relaxed hangers leads to new equations for calculating forces and deflections. This complicates calculations because influence lines can not be used. However, modern computer programs can easily calculate the static effects of hangers relaxing.

Back in 1962 the influence lines for the two Norwegian network arches were calculated by means of the Sara digital computer of the Swedish Aircraft Corporation (SAAB). Using a primitive frame program for calculating network arches, relaxation of hangers could be accounted for by removing hangers in compression and recalculating, until all hangers that were not in tension had been removed. When the first two Norwegian network arches were calculated, computer facilities were not available for recalculation.

For this reason it was necessary to avoid relaxation of any hangers. This was not so difficult because the collapse limit state had not been introduced at that time. A need was felt for an easy method for predicting the relaxation of hangers. The method might still be of interest, but casual readers should skip the rest of the chapter except for the last two pages. Others might come back to this chapter after having read most of this publication.

It can be seen that the influence lines for hangers on pp. 57 and 58 have nearly the same shape as influence lines for diagonals in trusses. If the network arch consists of three trusses on top of one another as in fig. 4b, p. 4 then the ordinates of the influence lines can be expected to be approximately one third of what they are in a simple truss. This, however, has little influence on the relative size of the positive and negative areas of the influence lines. Thus simple truss models could be used in order to decide approximately what loads will relax a hanger in a network arch.

The reasoning leading to the diagram in fig. 35 was slightly different. See fig. 36 next page.

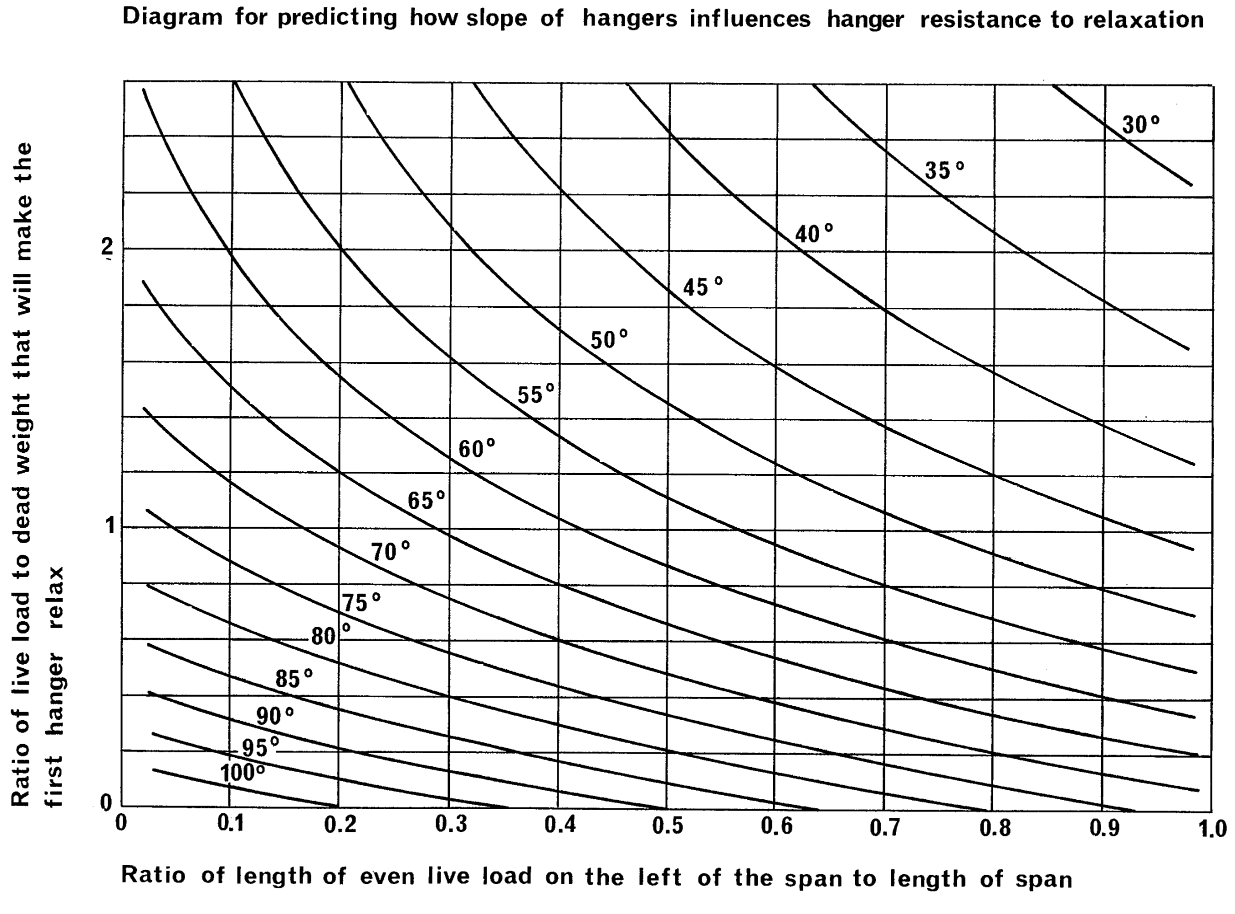

Fig. 35. Connection between slope of hangers and relaxation of the first hanger for a span with a rise/length ratio of 0.15

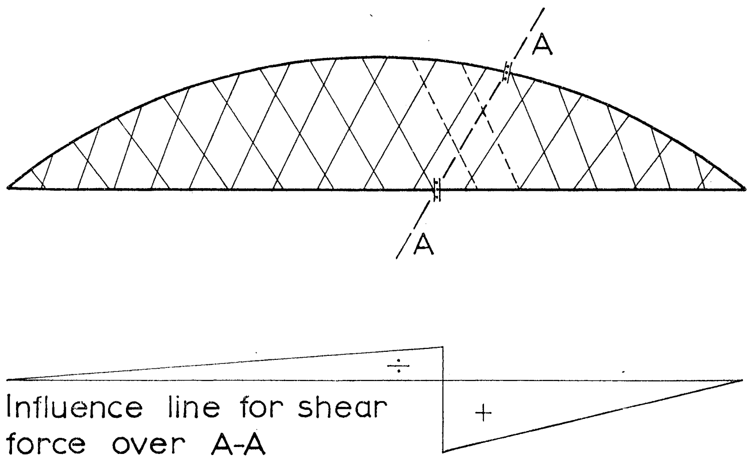

Fig. 36. Network arch with hypothetical releases for the calculation of hangers' resistance to relaxing

The line A-A in fig. 36 is parallel to adjacent hangers. The relaxation of hangers leads to considerable increase in bending moments only after all hangers across the line A-A have become relaxed. Thus it is of interest to calculate what loads will relax all hangers across a line A-A in fig. 36. Tveit 66.

For the dotted hangers in fig. 36, this can be done by finding the sign of the shearing force across in A-A. These joints can take bending, but no shearing force. Assuming no bending in the chords, the hangers will not be relaxed if the shearing force at A-A is positive. The dotted hangers' resistance against becoming relaxed will depend on the slope of A-A, i.e. the slope of the hangers adjacent to A-A.

The hangers' actual resistance against becoming relaxed is slightly larger than found by this method. This is mainly due to the presence of shear and bending in the chords. The above method has been used to prepare fig. 35 and figs 38 to 38f. These graphs indicate the slopes that will enable hangers to resist certain ratios of live to dead load.

The spans are assumed to be loaded from the left end, as this is the type of loading that is most likely to make some hangers relax. It has been found that for various reasons, including shear and bending moments in the chords, fig. 35 and figs 38 to 38f give a reasonable prediction of the relaxation of the first hanger. The prediction is best for long bridges with slender chords.

The design and use of the diagrams in fig. 35 and figs 38 to 38f are explained at length later in this chapter. The diagrams look alike, but the rise of the arch differs. In fig. 37 relaxed hangers are dotted. The bridge has begun to act as a part of an arch with one set of hangers along the line A-A. As mentioned before in this chapter, the bending moments will now start to increase faster because the nodes in the arch and tie are less firmly kept in place by the hangers. More on this in figs 67 and 68.

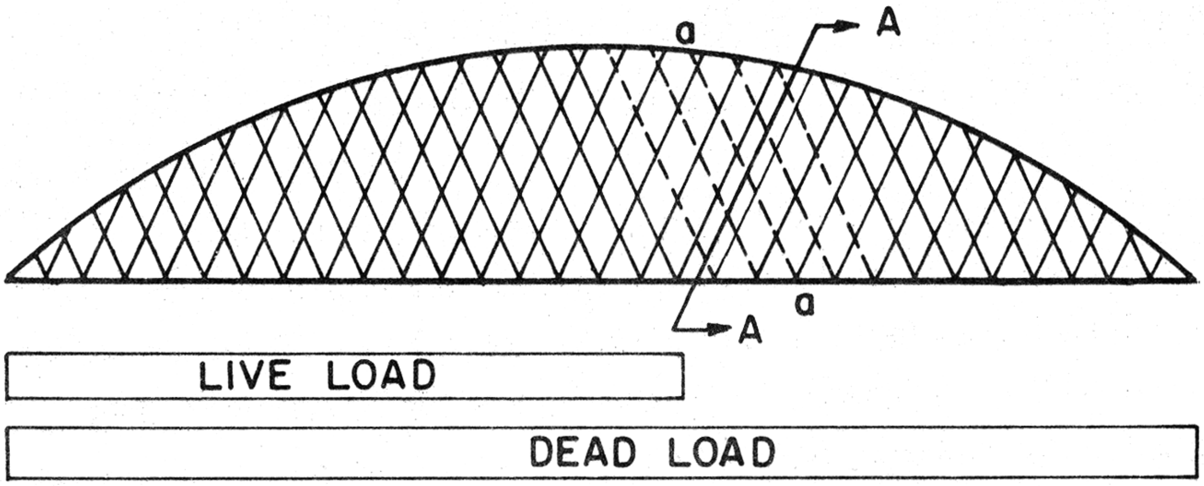

Fig. 37. Network arch with live load from one end of the span

Let us look at the stresses in the chords of the railway bridge in fig. 44, p. 42 and fig. 44a, p. 43. In fig. 44a there is no live load on the 28.05 m on the left of the 65 m span. Four hangers relax. Compared to the full live load on the bridge in fig. 44 the biggest increase in bending in the arch is in node 21 where the bending moment increases from ~35 tm to ~75 tm. At the same time the maximal axial force decreases from 1467 t to 1040 t. Maximum stress due to these forces will be:

For full load. (Fig. 44):

$\sigma = N/F + M/W_{xu} = 1440/690.6 + 3500/9059 = 2.47\ t/cm^2$

With no live load on the leftmost 28.05 m of the span. (Fig. 44a):

$\sigma = N/F + M/W_{xu} = 1040/690.6 + 7500/9059 = 2.33\ t/cm^2$

Excuse the old-fashioned terms. “t” means metric tons everywhere in this publication. The results come from linear calculations. Hangers that had no tension were removed by hand before recalculation. The cross-sectional data were taken from fig. 42, p. 41. It can be seen that the reduction in the axial force more than made up for the increase in bending. This is a usual result. Since the arches are relatively stiff, the effect of the tendency to buckle is not likely to change the picture.

How to predict when hangers will become relaxed?

When dead load and live load are fixed, the tendency for relaxation is primarily decided by the slope of the hangers and the form of the arch. The stiffness of the chords and the cross-sections of the hangers also influence the result, but to a lesser extent. Stiff chords and the small cross-sectional area of the hangers reduce the tendency for relaxation.

After hangers have started to relax, the bending moments increase more quickly with increasing partial live load. See fig. 73, p. 68. When one set of hangers relaxes, the bending moments will carry more load. Thus the maximum tension in hangers usually becomes slightly smaller. See fig 45, p. 44.

Let us now turn our attention to computing the loads that will make a hanger relax. To calculate the ratios of live load to dead load which will make a hanger relax, it is necessary to compute the influence lines for the hanger by a computer program. First the relaxed hangers must be removed. Once the influence line of a hanger is obtained, it is easy to compute the ratio of live load to dead load that will give zero tension in the hanger. A frictionless joint is assumed in the chords at each side of the line A-A.

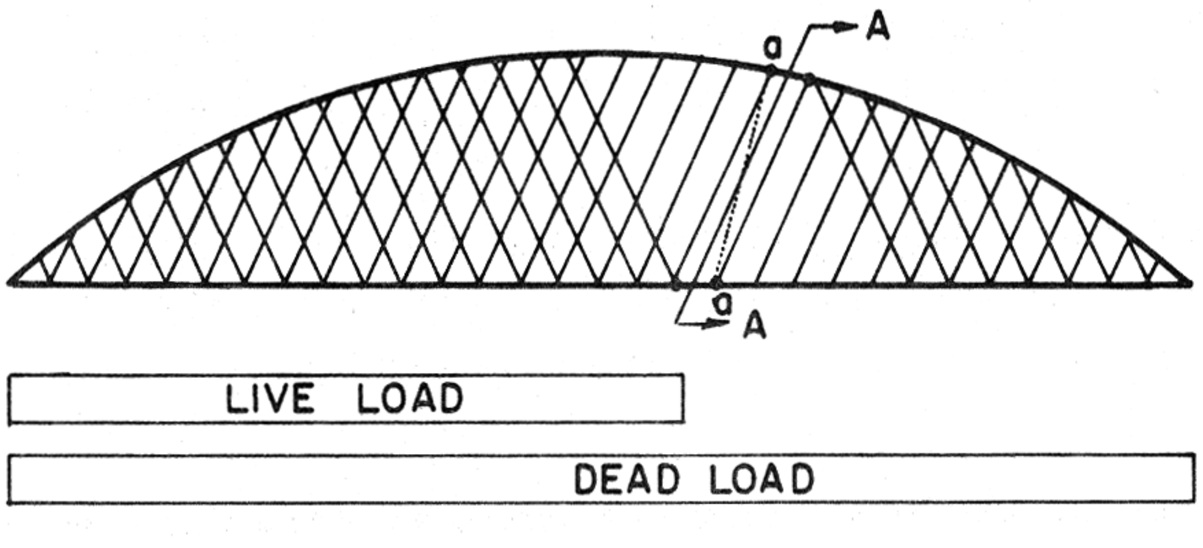

Fig. 37a. Bridge with live load on the left hand side of the span. Relaxed hangers are not shown.

Once the influence line is obtained, the ratio of live load to dead load which will give zero tension in a hanger can be computed as follows.

$-A_1(LL+DL) + A_2 \cdot DL = 0$ (e1) First equation

$LL/DL = A_2/A_1 - 1$ (e2)

Here LL is evenly distributed live load
DL is evenly distributed dead load
A_1 is the area under the negative part of the influence line
A_2 is the area under the positive part of the influence line

The ratio LL/DL may be approximated without having to compute the influence lines. If the bending moments and shear forces in the chords are disregarded, it is easy to find the ratio of live load to dead load that makes the hangers across the line A-A in fig. 37a relax.

This can be seen from drawing the influence line for the imaginary member a-a in fig. 37a. This is done in fig. 37b. See next page. Movements of the non-deformable parts I and IV that shorten and relax a-a will also shorten and relax the other hangers across A-A. The relative deformations of the parts I to IV can be found by a virtual displacement. This is done by a method taught to undergraduates at the technical university in Trondheim in the middle of the last century. The method seems to have vanished.

The influence lines are drawn without stating the size of the ordinates. The factor K in the next equation can be determined by calculating one ordinate. However, calculation of this ordinate is not necessary in order to find the load that relaxes a-a.

Relaxation of the imaginary hanger a-a in fig. 37a occurs when the ratio of live load (LL) to dead load (DL) is given by the equation:
$LL/DL = (KA_2 - KA_1)/KA_1 = A_2/A_1 - 1$ (e3)

The assumption that bending moments and shear in the chords are equal to zero corresponds to assuming joints as shown in fig. 37a and 37b.

The result is more generally applicable if we assume that the distance between the hinges, λ, is very small compared to the length of the bridge. It is easily seen that the exactness in the prediction of increase in bending moments is not much influenced by this distance. Calculations become much simpler when the distance between the hinges is considered small.

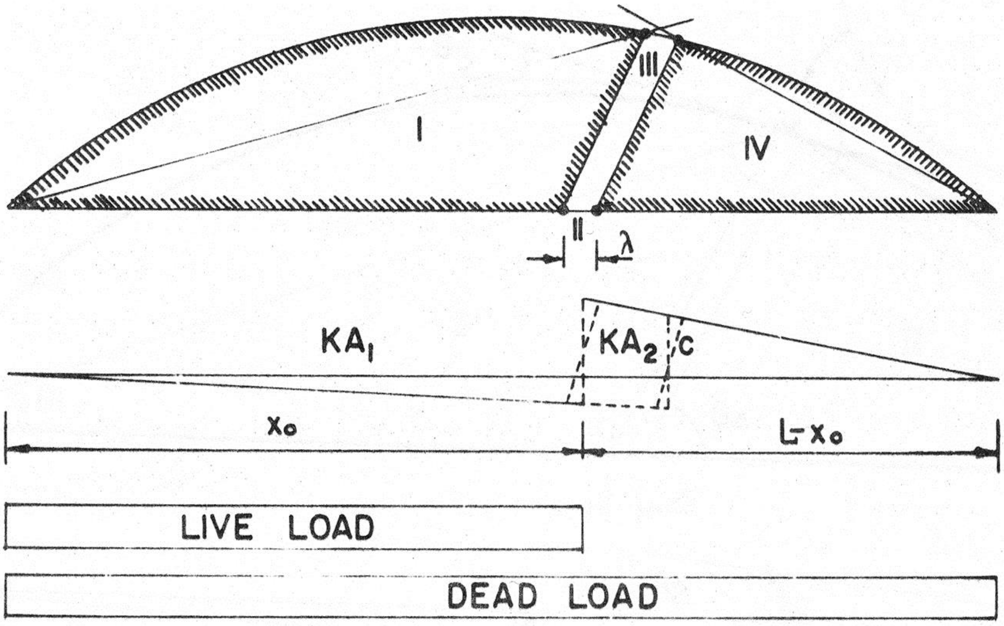

Fig. 37b. shows the parts of the bridge that will move as undeformable bodies when the influence line for a-a in fig. 38a is found by the kinematic method

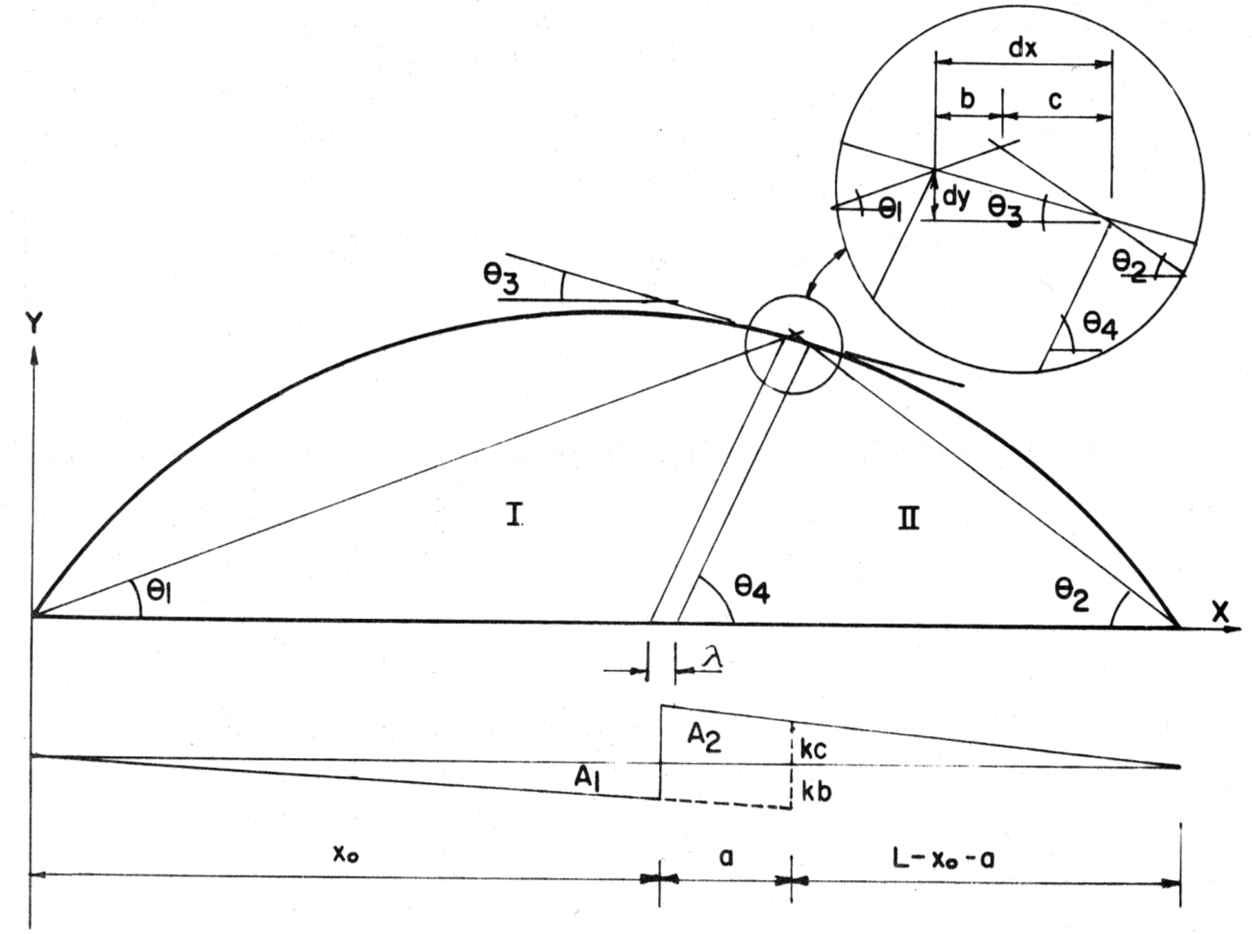

Fig. 37c is used for calculating hangers' resistance against relaxing

Calculations are made with symbols in fig 37c. Note that $\tan\theta 2$, $\tan\theta 3$ and dy are negative when they refer to lines that slope down to the right.

Figure 37c: is used for calculating hangers' resistance against relaxing.

We have: $b + c = dx$ (e.4)

$\tan\theta_3 = dy/dx$ (e.5)

$b \times \tan\theta_1 + c \times \tan\theta_2 = dy$ (e.6)

$$\frac{A_2}{A_1}=\frac{c}{b}\,\frac{\dfrac{(L-X_0)^2}{L-X_0-a}}{\dfrac{x_0^{\,2}}{x_0+a}} \qquad (e.7)$$

The symbols used in (e.4) to (e.7) are defined in figures 37b and 37c.

Combining (e.4) and (e.7) and inserting them in (e.3) we get:

$$\frac{LL}{DL}=\frac{(\tan\theta_1-\tan\theta_3)(x_0+a)(L-x_0)^2}{(\tan\theta_3-\tan\theta_2)(L-x_0-a)(x_0)^2} \qquad (e.8)$$

Figure 37d, on the next page, shows the results of measurements on the model in Tveit 59. Disregarding shear forces and bending moments leads to about 20% under-estimation of the live load that would cause all hangers crossing line A-A in figs. 37 to 37a to be relaxed.

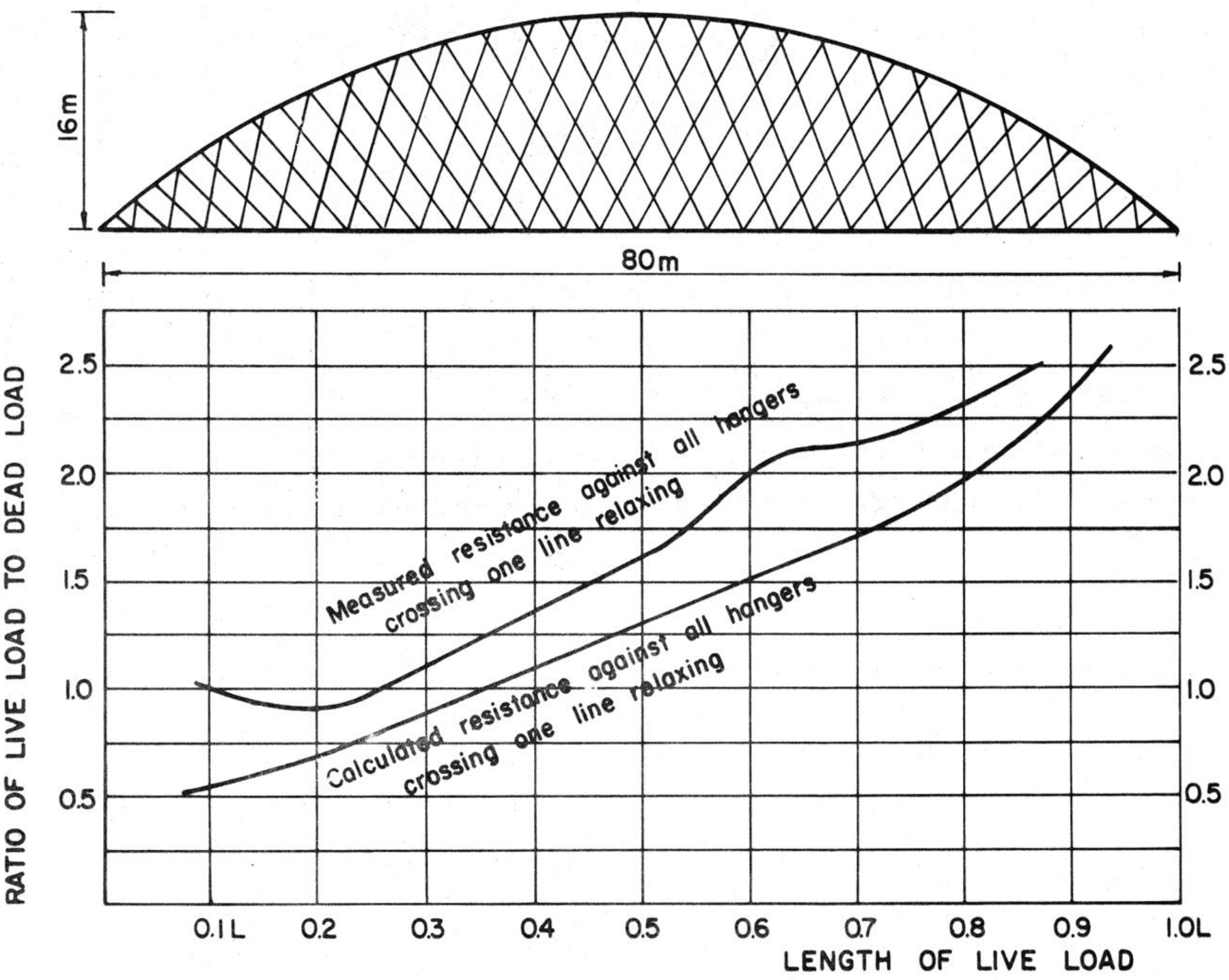

Fig. 37d illustrates the discrepancy between calculated and measured resistance against relaxation of all hangers crossing one line

As can be seen from fig. 37d the deviation of approximately 20% between calculated and observed live load that relaxes all hangers crossing a line was observed in the middle 80% of the span. This deviation occurs because we have some bending moments and shear forces in the vicinity of A-A in figs 37 and 37a. Thus, the calculated theoretical value is a good enough indication as to what live load makes moments in chords start to increase due to relaxation of hangers.

Formula (e.8) has been used for calculating LL/DL values for hanger relaxation in 37d. It has also been used for calculating the diagrams in figs 38a to 38f. See the next four pages. Some of these diagrams were first published in Tveit 66.

To sum up: The diagrams in figs 38a to 38f have been calculated to show what ratio of partial live load to dead load, (LL/DL) makes hangers relax in a section right in front of the live load, under the assumption that there is no bending moment or shear force in the chords.

Because of bending and shear that occur in the chords of the network arch, the diagrams in figs 38 to 38f. underestimate the magnitude of the partial live load that is necessary to make all the hangers in a section (like A-A in fig. 37a), in front of the partial live load, relax.

Experience so far shows that the diagrams in figs 38a to 38f underestimate even the partial live load that will make the first hanger in front of the partial live load relax. Therefore, these diagrams can be used for finding ratios of partial live load to dead load that can be used without any danger of having hangers relax. Figs 37e and 38f illustrate how this is done.

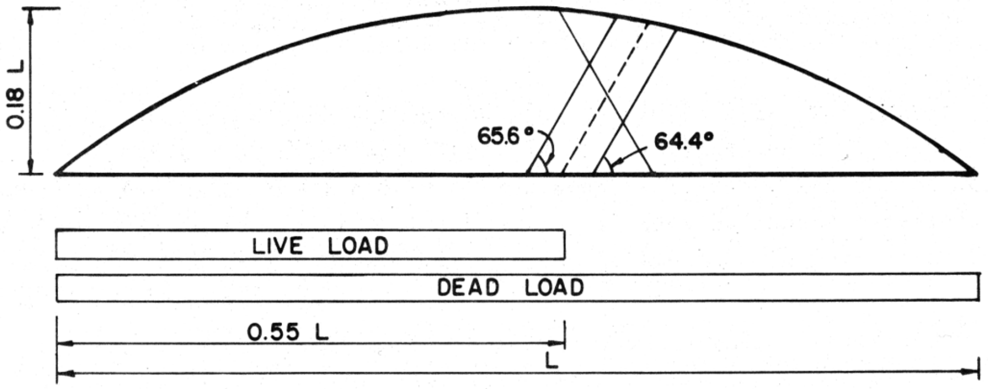

Figure 37e. Chords and some hangers in the Bolstadstraumen Bridge. Tveit 66.

In fig. 37e most of the hangers of the Bolstadstraumen Bridge are omitted. By means of fig. 38f the resistance against relaxation of the hanger sloping down to the right can be found. See dotted line in fig. 38f. The dotted line indicates that a partial live load of 0.7 times the dead load covering 0.55 x L from the left of the span will not relax the hanger sloping down to the right on the drawing. In fact no hanger crossing the dotted line on the drawing will relax as long as the partial live load is not greater than 0.7 times the dead load.

Figs 38 to 38f can be used to find hangers' resistance in hangers that are not too near to the ends of the arches. Usually the resistance against relaxation in the hangers that are near to the ends of network arches is no problem. See fig. 38g.

Figure 37e corresponds to the dotted line in figure 38f. For the network arches built in Norway the diagrams in fig. 35 and fig. 38f consistently give values of live load smaller than those necessary to make the first hangers relax. For the bridge at Steinkjer the diagram in fig. 35 gives loads that were 15% or more too small. For the bridge at Bolstadstraumen the loads found by means of diagram 38f were 5% or more too small to make hangers relax. The bridge at Steinkjer had a stiffer lane, and that is probably the reason for the estimated loads here being more on the safe side.

How much concentrated loads influence hangers' tendency to become relaxed can best be judged by looking at influence lines of bridges that have already been calculated. See figs 41, 63, 64, 65, 77 and 84.

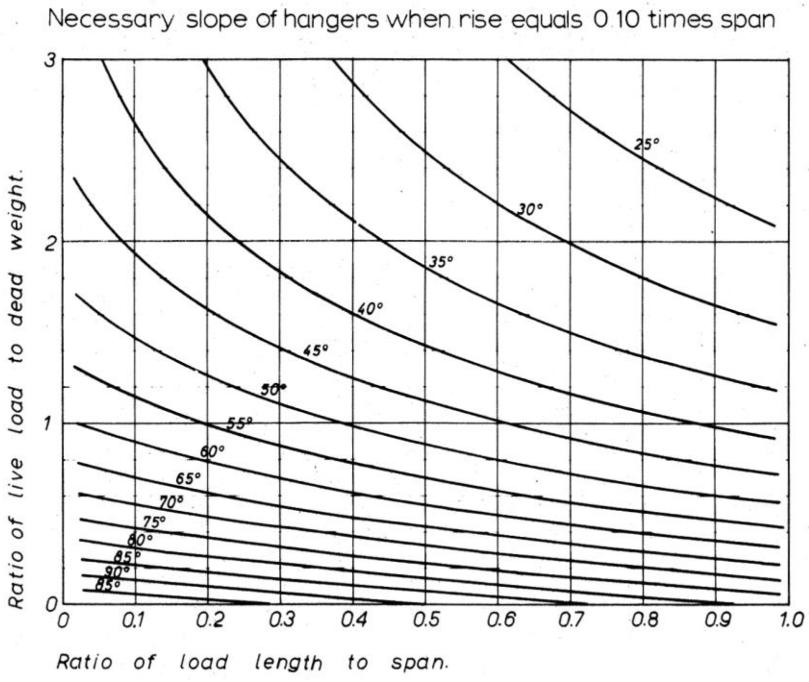

Fig. 38. Slope of hangers necessary for preventing the relaxation of hangers when bridges with f/L=0.1 carry uniform load from the left

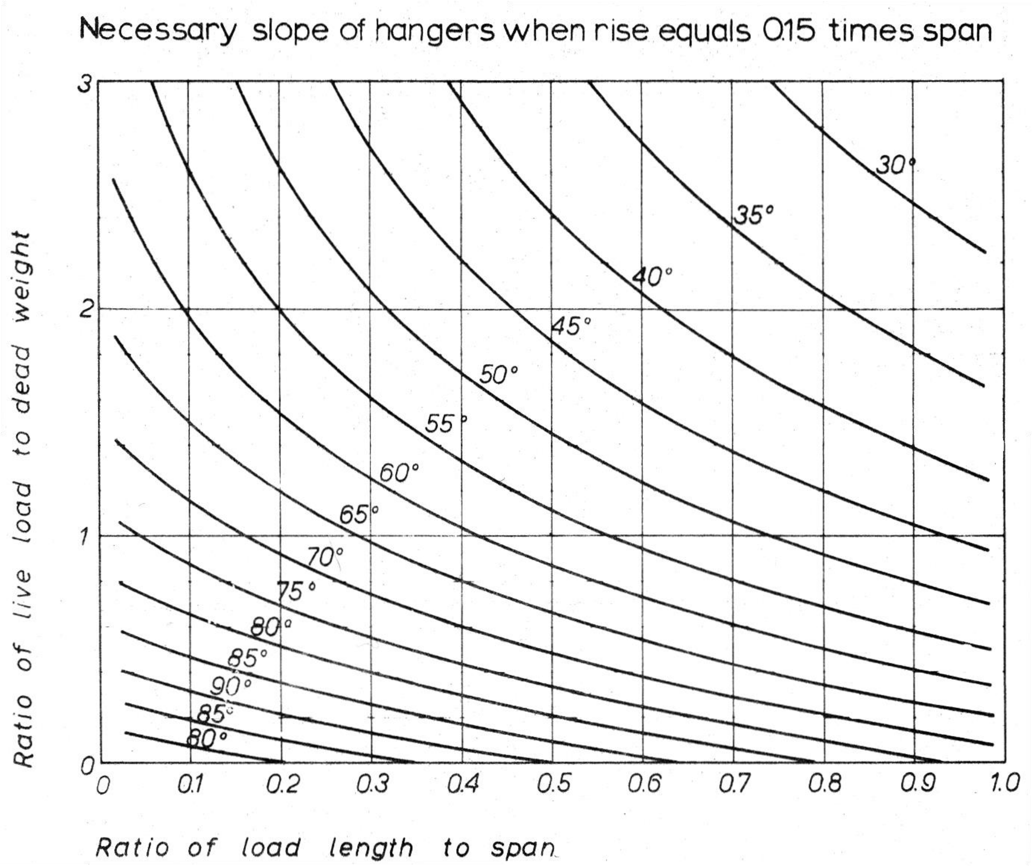

Fig. 38a. Slope of hangers necessary for preventing the relaxation of hangers when bridges with f/L= 0.15 carry uniform load from the left.

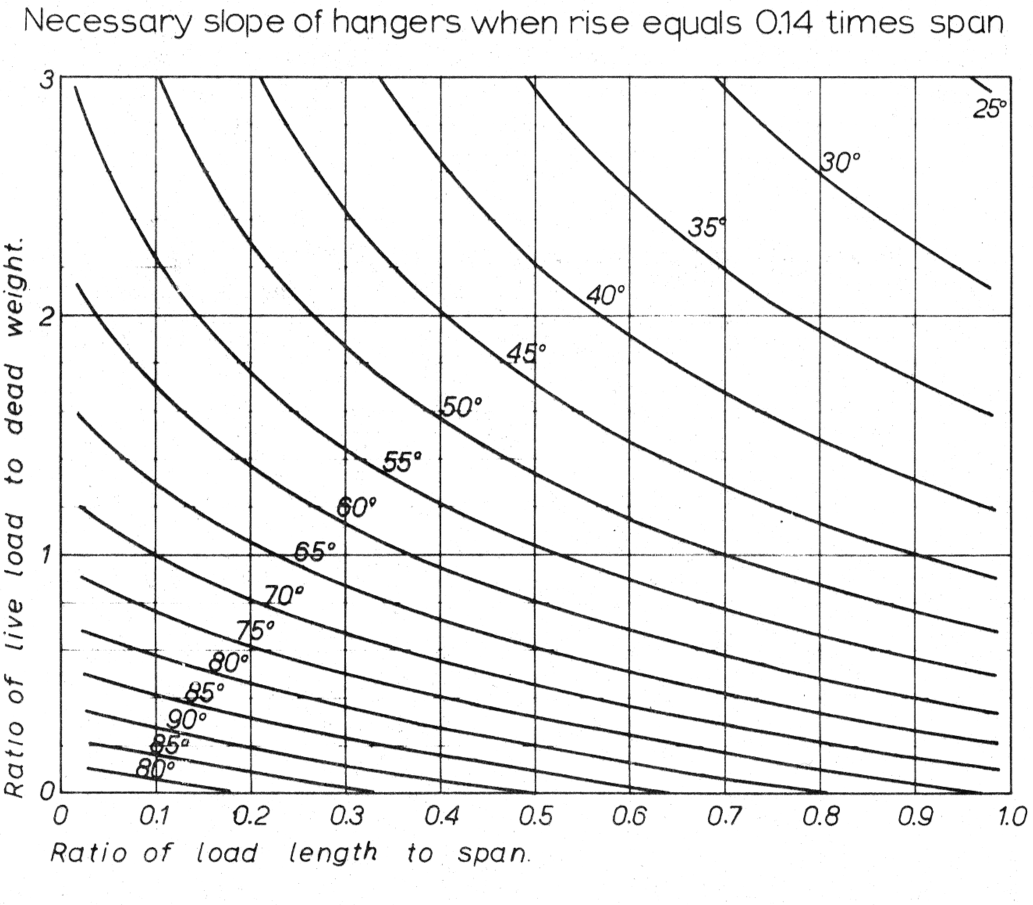

Fig. 38b. Slope of hangers necessary for preventing the relaxation of hangers when bridges with f/L=0.14 carry uniform load from the left

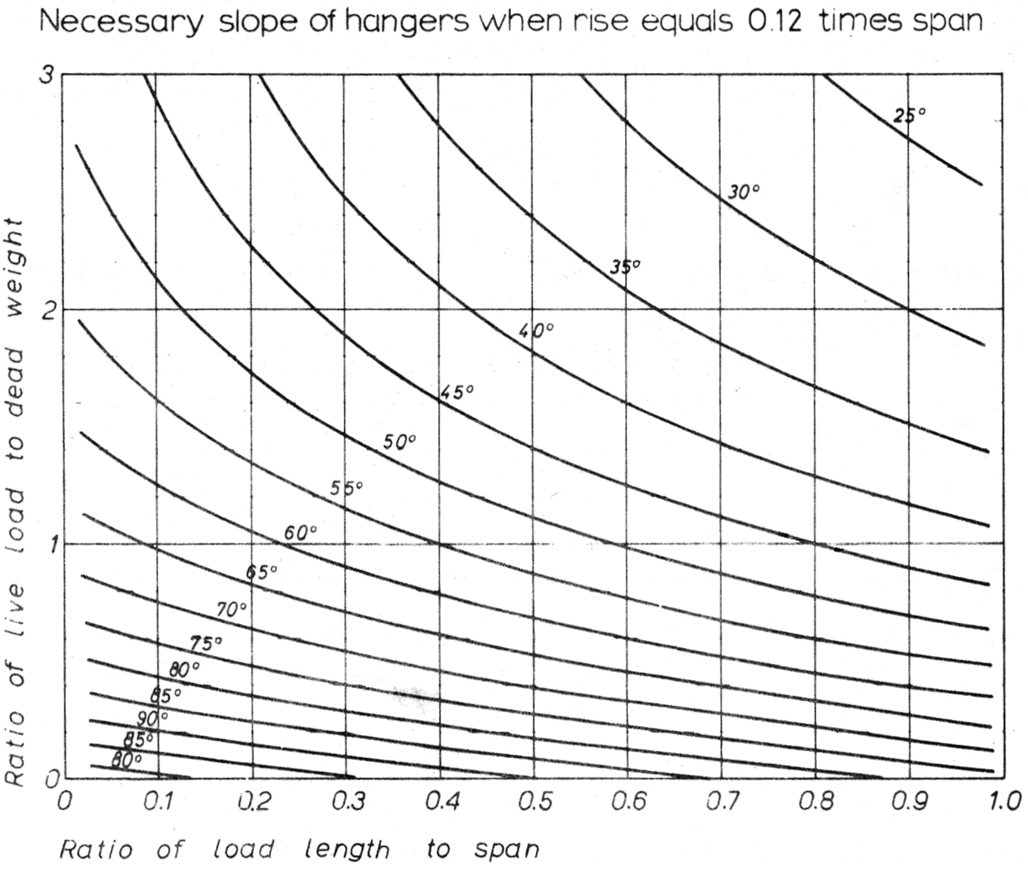

Fig. 38c. Slope of hangers necessary for preventing the relaxation of hangers when bridges with f/L=0.12 carry uniform load from the left

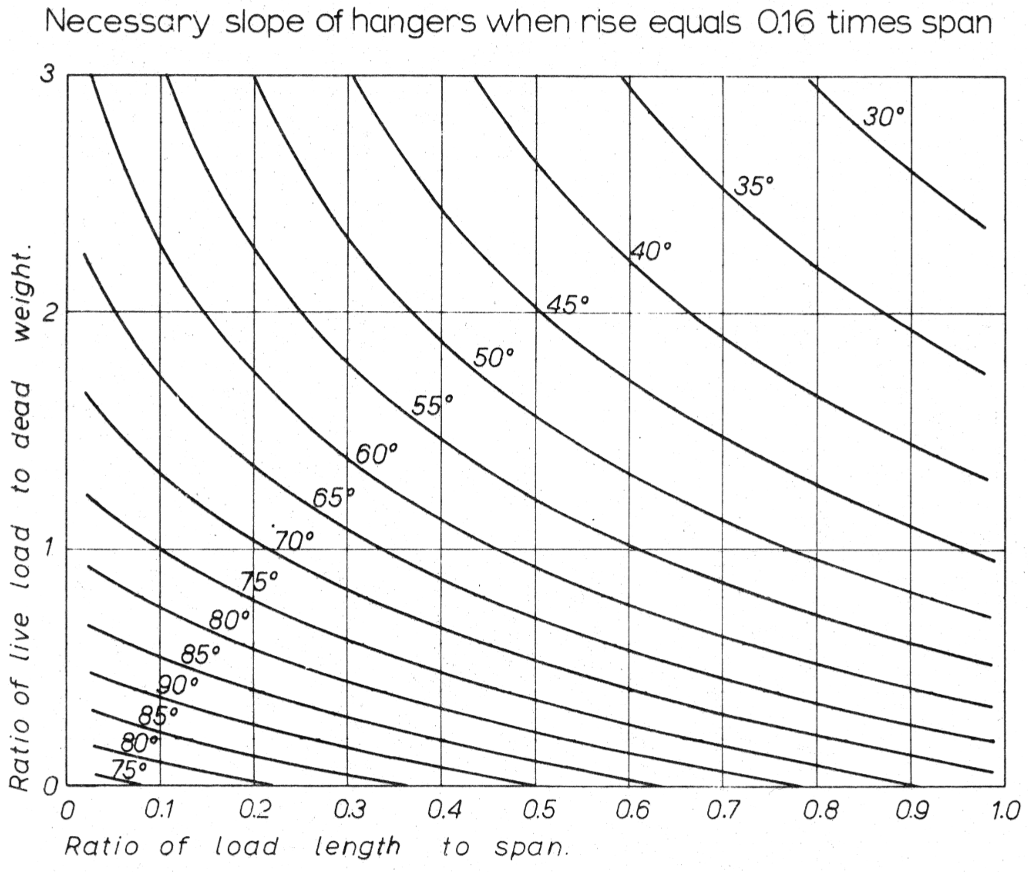

Fig. 38d. Slope of hangers necessary for preventing the relaxation of hangers when bridges with f/L=0.16 carry uniform load from the left

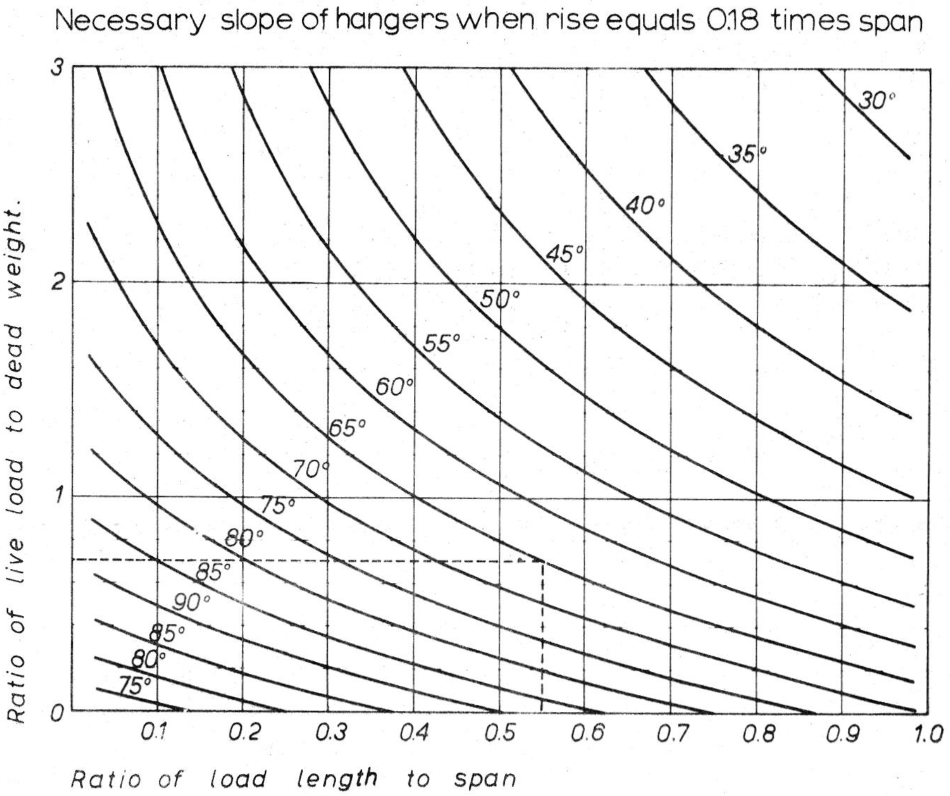

Fig. 38f. Slope of hangers necessary for preventing the relaxation of hangers when bridges with f/L=0.18 carry uniform load from the left

Bridge load usually consists of a combination of concentrated and evenly distributed loads. When using figs. 35 and 38a to 38f it seems a rough, but reasonable assumption that the loaded influence line is a triangle. Then the bridge load can be transformed into an equivalent evenly distributed load, which is equal to the evenly distributed bridge load, plus the concentrated load divided by half the loaded length.

Fig. 38g gives the result of applying the diagram in fig. 35 to the skeleton lines of the bridge 200A on page 59 to 68 and the tendencies for relaxation found from the influence lines of the hangers. Tveit 80a. The correlation is surprisingly good in the middle two thirds of the span.

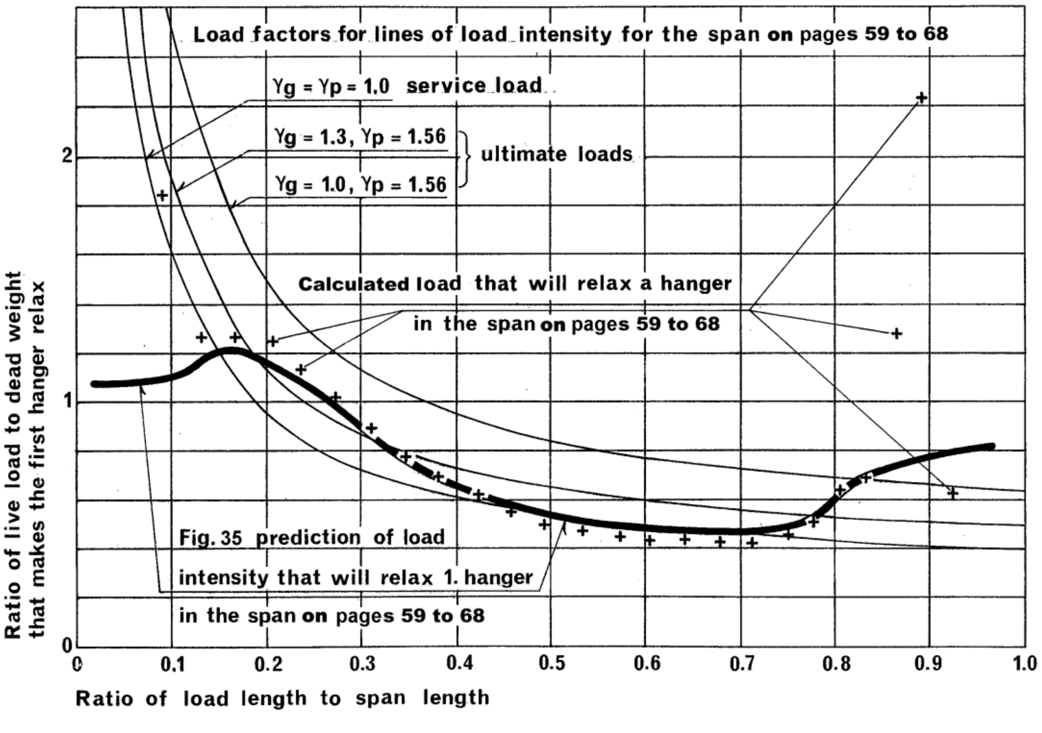

Fig. 38g. Relaxation of first hanger according to fig. 35 and according to a calculation of the span on pp. 59 to 68. The span 200A is also mentioned on pp. 8, 13 and 15.

The prediction of a hanger's relaxation found by figs 35 and 38a to 38f is best for long bridges with slender chords. For stiffer and shorter spans the diagrams 35, 38a to 38f are likely to overestimate the hanger's tendencies to relax. This is because shorter spans and/or spans with stockier chords tend to accumulate more shear and bending in the chords prior to relaxation of hangers.

For Bolstadstraumen Bridge in fig 7, p. 7 and fig. 64, p. 58 the overestimation of the hangers' tendency to relax was 5% or more for all hangers. That means that the hangers had a smaller tendency to relax than calculated by means of fig. 38f. For the Bridge at Steinkjer fig. 6, p. 5b, and fig. 6a and fig.6c p. 6 and fig. 63, p. 57 the overestimation of the hangers' tendency to relax by means of fig. 35 on p. 28 was nowhere under 15 %.

The thin curves in fig. 38g represent equivalent load intensity according to the Danish regulations for road bridge loads. See fig. 23 and Vejdirektoratet (74) for the span on page 60. It is interesting to note that full load on the whole span decides the dimensions of the span on page 60. This is so, even though the equivalent load per unit length for 0.61 times the length of the span was more than 75% greater than the load that made the first hanger relax. This is caused by the considerable stiffness of the arch. See fig. 24, p.14, and figs 70 and 76 on p. 65, and p. 71.

For full load on the left 50 % to 70% of the span some hangers may relax occasionally in the serviceability limit state. For these loads the chords in the ultimate limit state carry considerable bending moments. In network arches with very slender chords, it would be very much on the safe side to avoid the relaxation of hangers also in the collapse limit state.

An increase in the live load over the years might be dangerous. Another reason for avoiding the relaxation of hangers might be a desire to save design work. See also pp. 67, 68 and 90.

For the loads on the right quarter of fig. 38g, p. 29h, the hangers' resistance against relaxation might seem unnecessarily high. Here the slope of the hangers was decided by the desire to have a relatively even force in all hangers.

The slope of hangers might not be chosen freely since it depends on the distance between nodal points in the middle of the lower chord and on the number of times a hanger in the middle of the span intersects with other hangers. The distance between nodes in the central part of the span and the number of intersections of a hanger in the middle of the bridge strongly influence the slope of all hangers.

Examples of choice of hanger arrangements can be found in two articles on preliminary design of network arch road bridges on the author's home page http://home.uia.no/pert/

Little is known about the optimal arrangement of three or more sets of hangers. Tveit 1984. See fig. 26, p. 16. It shows the hanger arrangement for a single-track railway bridge spanning 67 metres. The live load is a train according to Union International des Chemins de Fer 74.

The author has been told that these days there is a tendency to increase the live load on railway bridges by around 30 %.

To prevent relaxation in the serviceability limit state, the two most sloping hangers in the steepest sets of hangers have been given up to 0.4% extra length. In other words various degrees of lack of fit have been introduced. Furthermore, the steepest set of hangers, and some hangers at the end of the span have 44% smaller cross-section than the other hangers. These measurements give a very even utilisation of hangers and contribute to evenly distributed bending.

NETS OF HANGERS. SOME SUGGESTIONS.

The optimal net of hangers is dependent on many factors. Five will be mentioned here:

1. Ratio of live load to dead load.

2. Size of concentrated load compared to size of evenly distributed live load.

3. Length of concentrated live load.

4. Rise of arch.

5. Curvature of arch. See page 27, third paragraph.

Hanger arrangements that have been used:

1. The same slope for all hangers. This might be the arrangement that looks best. Since rope hangers can hardly be seen from a distance, this might not be very important. If the hangers start from evenly distributed nodes in the lower chord, the same slope for all hangers is frequently used. See H-5 to H-7 in Systematic Thesis on Network Arches.

2. In the network at Steinkjer and in the Bolstadstraumen Bridge the slope of two adjacent nearly parallel hangers differs by 1.8˚ and 1.7˚. The steepest hangers are 74.4˚ and 73.8˚. See pp. 56-58 and Tveit 1966. Very even maximum hanger forces were obtained.

3. In the two bridges designed for the IABSE congress in Vienna in 1980 (See pp. 59-72) the distance between the nodes in the middle half of the tie is constant. In this way the longitudinal bending moment in the middle half of the tie is reduced. For ViennaA that distance is the same as in the arch. For ViennaB the distance between the nodes in the middle half of the tie is 97.6 % of the distance between the nodes in the arch.

The nodes in the half of the tie nearest to the ends of the bridges are placed in such a way as to obtain the same decisive force in all hangers. See figs 65 and 77.

4. In the network arches suggested by Schanack and Brunn 2009 the angles between the arch and the hangers are constant. Towards the end of the arches one might give some of the hangers another slope to obtain more even hanger forces. This arrangement seems to produce some good results and the author recommends it wholeheartedly to designers pressed for time.

In the Ph.D. thesis of the author’s former student S. Teich 2012, there is a more optimal arrangement of hangers in chapter 5. His thesis can be found here:
http://www.qucosa.de/fileadmin/data/qucosa/documents/8604/Dissertation_Teich.pdf

Fig. 39. Lifting the temporary steel skeleton of the Åkvik Sound Bridge in fig. 97, p. 93. Span 135 m.

DESIGN OF TEMPORARY LOWER CHORDS

Some very promising methods of erection use a temporary lower chord. See figs 21 and 22 p. 12, and figs 56 and 57 pp. 50 and 51. Combined with arch and hangers, the temporary lower chord makes a stiff steel skeleton. This steel skeleton can be moved when lifted near the ends. It has enough strength and stiffness to carry the concrete tie while it is cast.

The temporary lower chord has longitudinal beams between the ends of the arches. Transverse beams are placed equidistantly except near the ends of the arches. Longitudinal wooden beams on top of the transverse beams carry the wooden form. This gives a convenient platform for placing the reinforcement and the prestressing cables.

Local conditions will decide how much formwork and reinforcement should be put in before the steel skeleton is moved to the final position. Fig. 39 shows how the steel skeleton of the Åkvik Sound Bridge in fig. 97 on p. 93 is lifted in place by Norway’s biggest floating crane. The lifting capacity is 600 tons. The steel skeleton weighs around 230 tons, but it might be practical to put in so much wood and reinforcement that 410 tons is lifted. Floating cranes that can lift over 3000 tons are available. The limited room under the hooks decides how high over the sea level the steel skeleton can be lifted. Normally it is better to use one crane at each end of the steel skeleton.

When the reinforcement and the form are finished, the concrete tie can be cast. First, the ends of the tie with the curved parts of the prestressing cables must be cast. Then the edge beams are cast. The casting must be done from both ends of the span in order to avoid relaxation of hangers during the casting.

Fig. 90 on p. 87 shows forces and deflections when the smaller edge beam in the Åkvik Sound network arch is cast. For the longitudinal steel beams the decisive load occurs during the casting of the concrete edge beam. After the concrete edge beams have been cast they take most of the bending in the tie. The prestressing cables take most of the axial force in the tie. Thus the transverse beams can be placed equidistantly even if this does not give minimum bending in the chords. Any transverse beam with enough length and strength can used. Finally the slab between the edge beams is cast. Afterwards the temporary lower chord can be removed and used again for erecting other network arches.

In fig. 39a, see next page, the temporary lower chord is joined to the ends of the arches just above the bearings. Reinforcement, dowels and diagonals in the lower chord are not shown. The temporary lower chord can be joined to the steel plate above the bearings. Some of the dimensions are taken from the bridge in fig. 97 on p. 93. Generally the dimensions are not the result of precise calculations. At the fixed end of the arches the main bearings can be of the types shown in figs 6b and 18.

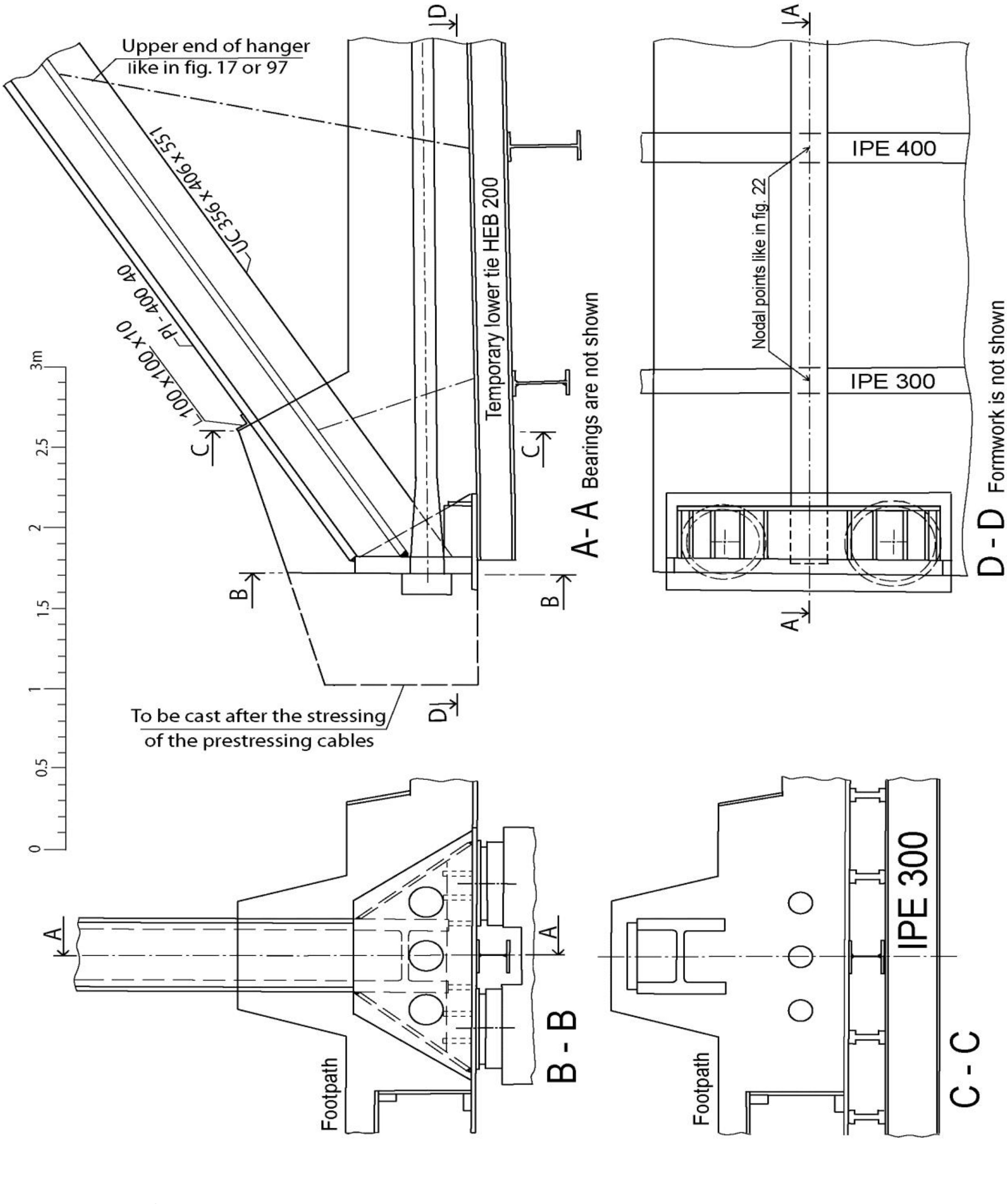

Fig. 39a. Ends of the temporary lower chord

Maybe the outer bearing under the ends of the arch in fig. 39a should be smaller than the inner bearing. Usually there will be an edge beam at the end of the concrete slab in the tie. In fig. 39a the end of the slab has been made thicker to avoid the edge beam. In order to reduce the necessary thickness of the end of the slab, one or two bearings can be placed on the bridge pier and under the ends of the slab. We have a discontinuous system if the slab touches the bearings at the end of the slab only due to big loads like trucks and buses.

Since the big loads are of short duration, load on the bearings last only a short while. Thus the bearings under the ends of the slab can be designed disregarding most of the relative movement between the bridge and the pier. Simple bearings can be used. After the temporary lower chord has been removed the hole for the temporary lower chord can be used for inserting hydraulic jacks when bearings need to be changed.

The author has often been asked: Since you have got the temporary lower chord anyway, why do you not make it part of a permanent combination of steel and concrete? Then you do not have to remove it. Below is a list of reasons why the temporary lower chord should not become part of the permanent tie. The author would like to state that the maximum potential of a network arch can be achieved only if the tie is a concrete slab.

1. A permanent longitudinal temporary steel chord leads to a deeper lower chord. This is unfavourable from the aesthetic point of view and leads to longer ramps at some bridge sites.
2. If the tie is a concrete slab instead of a steel structure, there is a smaller distance between the traffic over and under the tie.
3. If the traffic under the bridge bumps into the tie, there is a bigger chance of damage if the tie is a steel structure.
4. A network arch with a permanent steel tie might be simpler to erect, but it would have a much higher steel weight. The comparison is lopsided, but in fig. 14 on p.10 the weight of the lower chord and the transverse beams is 264 tons. The temporary lower chord for the same bridge weighs 24 tons. See page 12.
5. The longitudinal bending in the lower chord in the finished span is so small that there is no need for a longitudinal beam of structural steel to take the longitudinal bending.
6. The concentrated wheel loads always cause a lot of bending in the slab. In narrow bridges only moderate amounts of extra reinforcement are needed for the slab to span between the arches.
7. If you use transversal beams, the loads on the slab are concentrated before they reach the edge beam. This gives more bending in the edge beams and in the arches. On page 66 it is shown how the wheel loads for the network arch in fig. 23 on p.13 are distributed when they reach the edge beam.
8. A permanent tie of structural steel in tension causes cracks in a concrete slab above it. This reduces the durability of the concrete slab.
9. Transverse beams in the permanent lower chord would make the reinforcement in the slab more complicated.
10. The temporary lower chord is joined together by high strength bolts. It needs no corrosion protection and can be produced on site. Thus the cost of fabrication per tonne is not high.
11. The edge beam is cast before the slab. When the slab is cast the longitudinal bending in the tie is taken mainly by the edge beam. Thus the distances between the temporary transverse beams can be constant.
12. A temporary lower chord can be used again and again in bridges of varying widths and lengths. One just has to make some new holes and maybe cut or weld some beams and windbracing. The wood on the temporary lower chord can be Doka beams that can be reused.
13. The transverse beams in the temporary lower chord can be chosen freely as long as they have sufficient strength. Any old beam might be used.
14. A permanent lower chord would be shop welded and would have a corrosion protection that has to be maintained forever.
15. The great longitudinal tensile forces in the tie are best taken by prestressing cables because of the high strength-to-cost ratio.
16. Prestressing cables prestressed against concrete will take fatigue well.
17. The longitudinally partially prestressed slab in the lower chord of a network arch bridge is favourable as far as maintenance is concerned.
18. The temporary lower chord is simple to remove and erect. See “Erection of the steel skeleton of a network arch on the side span of the Skodje Bridge,” page 50a, and “Removing the temporary lower chord of the Skodje Bridge”, page 52.
19. If a permanent lower chord is used, the formwork might still have to be removed. If the formwork becomes part of the permanent structure, it is likely to be relatively costly.

NETWORK ARCHES ERECTED ON ICE

The author has designed a network arch with four sets of hangers. Tveit (84 b and c). See fig. 26 on p. 16. It was a two-lane bridge with a span of 100 metres designed for Arctic areas. The tie was to be cast and cured on a 2.5 metre thick reinforced layer of ice floating between piers.

All hangers have the same cross-section. Even before introducing lack of fit in the hangers, the average maximum hanger force was 93% of the maximum force in the hanger with the greatest maximum load. By introducing lack of fit in the hangers, maximum hanger force can be made more even and maximum bending in the chords can be reduced. In a network arch with only two sets of hangers little can be gained by introducing a lack of fit or by prestressing some hangers, except at the ends of the arches.

When the concrete is cured, the structural steel is erected and the finished span is lifted up to its final position. The method of erection could be competitive and would contribute to reducing winter unemployment among building workers in Russia and Canada.

A better approach is to erect the steel skeleton on ice in the winter and lift it onto the pillars. To make the span look good, the lower chord should have an upward camber of at least 1% of the span. The surface of the ice is flat. The creep, shrinkage and elastic compression in the tie will give the span an upward camber. The compression in the arch works the other way. To achieve a suitable camber in the lower chord, blocks of wood of varying heights can be put on the ice under the transverse beams in the temporary lower chord.

For this type of erection one would want to prevent water from seeping onto the surface of the ice near the steel skeleton. If this is achieved, the strength of the ice would be ample. 600 to 800 mm might be sufficient for carrying the 1.2 ton per metre that the steel skeleton for the Åkvik Sound would weigh for the two weeks that the erection of the steel skeleton would take. The Alberta Occupational Health and Safety gives this general guidance: For clear blue ice 690 mm thick, the permissible load for working on river ice is 8 tons.

Sufficient thickness of the ice can be produced on cold days by pumping water onto the ice. Spraying water in the air above the ice can accelerate the process. In Arctic areas this might not be necessary since it is usually easy to achieve one metre thick ice. Reinforcement of ice with wood is treated by Cederwall and Fransson 1979. If such reinforcement is used to reduce the creep in the ice, it could be placed on 100 to 150 mm thick ice before water is pumped onto the ice.

Tekn. dr. Lennart Fransson suggests an experiment to find the necessary thickness of ice to support the erection of the steel skeleton. Sand weighing as much as the steel skeleton could be put out on ice of varying thickness to see how soon the water started seeping onto the surface of the ice.

The snow must be removed from the ice near the bridge site in order to avoid layers of snow in the ice. Such intermediate layers of snow would reduce the strength of the ice cover. Another reason for removing the snow is that the insulating effect of the snow could make the ice melt from below. This might be important if very thick ice has not been achieved.

When there is only a slight movement in the water, it is enough to put the snow in longish heaps in the vicinity of the bridge. If there is a slight unidirectional current at the bridge site, only the snow on the upstream side of the bridge should be piled up in longish heaps.

When the ice is thick enough, it will be an almost ideal platform for erecting the steel skeleton. The steel skeleton consists of the arches and the hangers plus a temporary lower chord. See figs 21 and 22 on p.12 and fig 39a on p. 29. In the Norwegian Åkvik Sound Bridge, see pp. 9 to 12, the 18 pieces of the arch would weigh up to 6 tons. A mobile crane that can reach up to 23 metres would erect these. There would be around 200 hangers weighing up to ~250 kg. There would also be 260 profiles with a weight up to 300 kg, but more than half of these profiles would weigh less than 20 kg.

A standard steel scaffold could support the erection of the arch. See pp. 50b to 51. When the scaffold is removed, the steel skeleton can be moved onto the bridge piers. In the spring the lower chord is cast. After the prestressing has been done, concrete can be poured in the space for the presses in the side spans.

RAILWAY BRIDGES

In 1964 when the author had finished his Ph.D. thesis, he happened to come across the drawings of a bridge to be built over the Tinnelv river at Stormo in Norway. It was a single-track railway bridge spanning 67.8 m. 275 tons of steel were to be used for the welded truss. Through preliminary calculations the author found that only some 80 tons of steel would have been needed for a similar bridge using network arches.

It deserves to be mentioned that the author did not pay enough attention to fatigue in his preliminary design. Since the bridge was soon to be built, there was no time for a redesign. In the over fifty years after the opening of the Tinnelv Bridge, Norwegian railway bridges with a span over 60 m, have been few and far between.

Since 1964 the author has been convinced that the network arch is suitable for railway bridges. It has a pleasing appearance, and the lower chord can very well be a concrete trough that carries the railway between the arches and at the same time provides the necessary horizontal tie needed. All lower chords made of concrete and especially the concrete trough with ballast give less noise than an all-steel solution. The thin lower chord gives shorter ramps. This is especially valuable in railway bridges on flat terrain because railways have smaller maximum gradients than roads.

Fig. 40 gives a comparison of the steel weights for different types of railway bridges. The lines for single-track railway bridges are found in (Herzog 1975). The shaded areas were first presented in Tveit 1973. Note that the double-track network arch bridge tends to use less steel than a usual single-track railway bridge! The low steel weight of the network arch bridges is not only due to the optimal behaviour of the arches having inclined hangers. It is also due to the use of a concrete trough or slab in the lower chord instead of the more common solution, i.e. using floor-beams and stringers of steel.

Steel prestressed against the concrete in the tie is less susceptible to fatigue and can carry high stresses. This contributes to low steel weights. The prestress makes the lower chord less susceptible to fatigue and more resistant to corrosion. The stress in the hangers is much influenced by fatigue. However, this is not very important, because the hangers are a small proportion of the steel weight. Furthermore all diagonals in truss railway bridges are also influenced by fatigue.

Fatigue increases the cross-section of the hangers. This increases the buckling strength in the arches. If fatigue decides the dimensions of the hangers and the arch, the weight of the concrete will hardly increase the steel weight because it gives constant stress in arch and hangers. There is little bending in a network arch. This is good because bending very often gives fatigue due to stress variation.

The cross in the diagram below indicates the steel weight found by Brunn and Schanack 2003. Their work will be a great help to anyone who wants to design a network arch railway bridge. There is much more on railway bridges in (Brunn and Schanack 2003), (Schanack 2008) and (Steimann 2002). These master's theses can be found in the author's home page http://home.uia.no/pert under the button Master's theses.

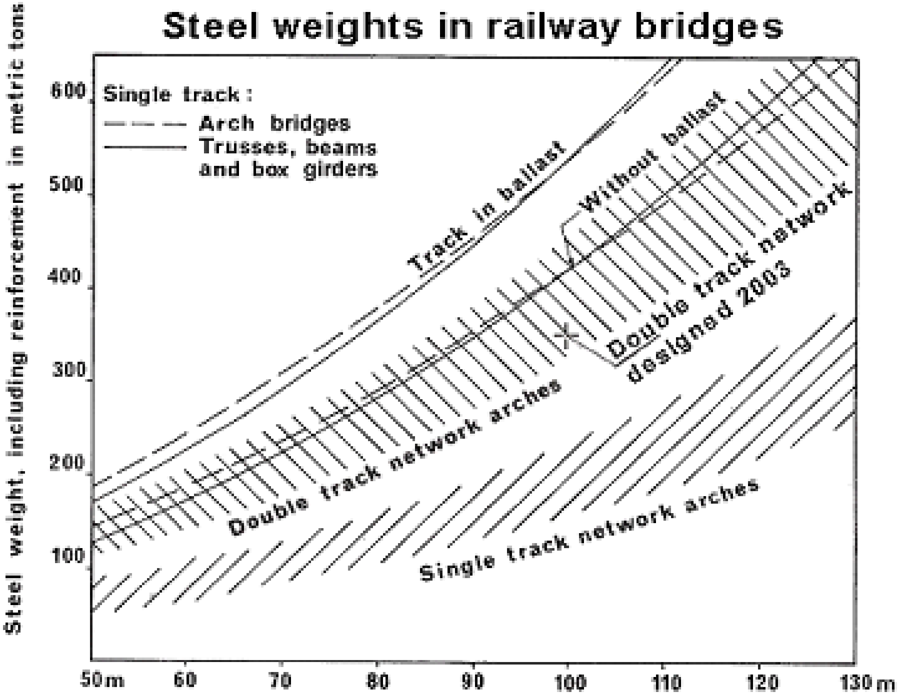

Fig. 40. Comparison of steel weights of various spans in different types of railway bridges

NETWORK ARCH RAILWAY BRIDGES DESIGNED IN GRIMSTAD AND DRESDEN IN 2002 TO 2007.

This part of the chapter is written partly by the designers of the various bridges. In 2002 and 2003 four students did their master's thesis in Grimstad, Norway. They were Uwe Steimann 2002, Benjamin Brunn and Frank Schanack 2003, and Mathias Räck 2003. Their graduation theses can be found at the author's home page home.uia.no/pert under the button "Master theses". The work of the professors Wolfgang Graβe and Steffen Marx of TU-Dresden has also increased the knowledge about network arches in railway bridges.

Steimann designed a two-track network arch railway bridge spanning 100 m with a rise of 15 m. Ties of steel and concrete were examined. See figs 40a, 40b, 40c and 40d. The bridge with a concrete tie used half as much steel.

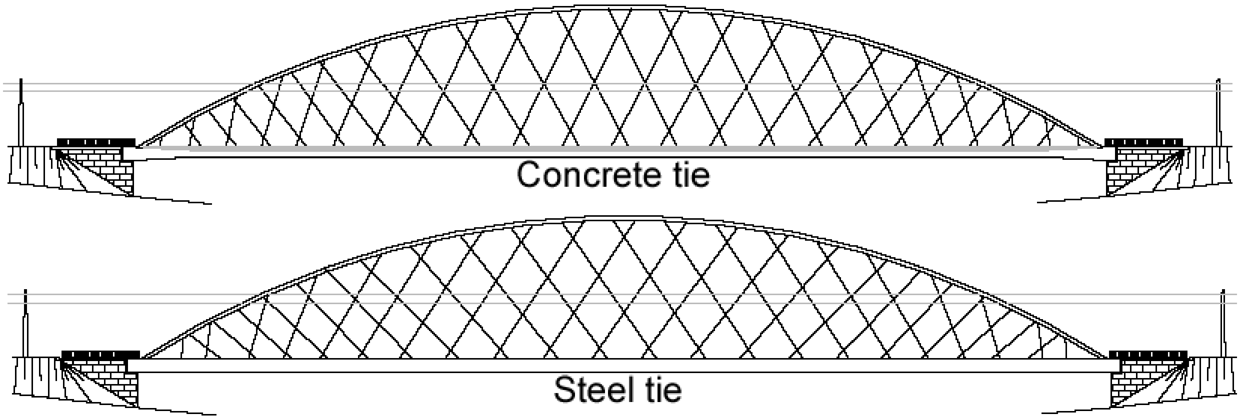

Fig. 40a. Network arch railway bridges spanning 100 m

Steimann found that H-profiles could hardly be used in the windportal and recommended a box section in the arches. He also recommended flat hangers -80x50 mm. This is as recommended by the German railways. The hangers can be cut and welded in a way that gives high fatigue strength.

Steimann went on to design network arches in the firm GMG-Ingenieurgesellschaft, GmbH, Dresden before he joined his father's firm.

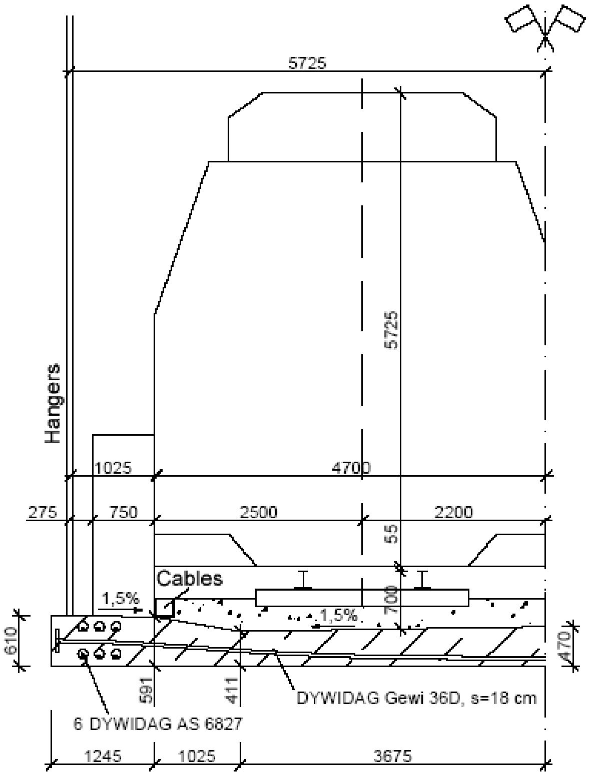

Fig. 40b. Cross-section of concrete tie

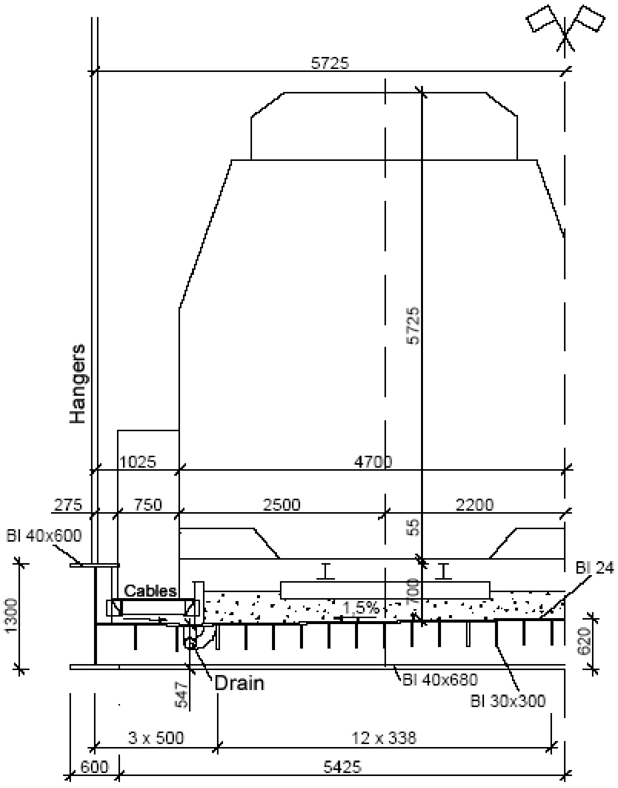

Fig. 40c. Cross-section of steel tie

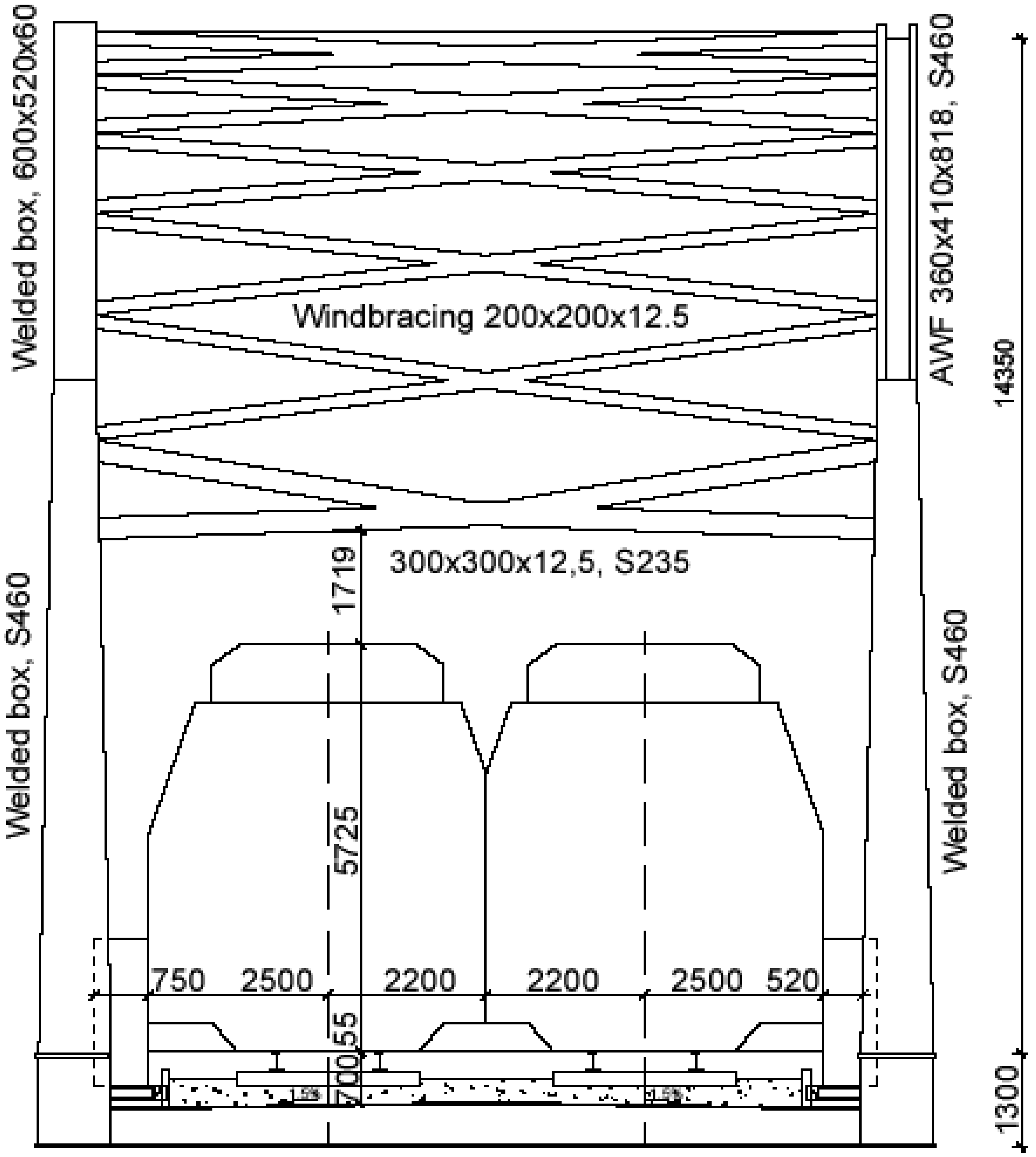

Fig. 40d. Front view with windbracing of steel alternative of Steimann’s railway bridge

Fig. 40e shows a two track railway bridge spanning 100 m designed by Brunn and Shanack

Benjamin Brunn and Frank Schanack did their master's thesis in Grimstad in the summer of 2003. They too designed a two track network arch railway bridge spanning 100 m. A colour picture is shown in fig. 40e. They used a rise of 17 m and a windbracing that is shown in fig. 40e. This windbracing has little room for electric cables above the train. The tie is made of concrete. One concrete cross-section is shown in fig. 40f. Their thesis is written in English. It can be found on http://home.uia.no/pert under the button "Master theses".

The distance between the arch planes measures 10.15 m. The 43 cm deep concrete slab that spans between the arch planes is transversely prestressed by threadbars with a diameter of 36 mm. They are placed 27 cm apart. A 47 cm deep reinforced concrete slab was a reasonable alternative without prestressing. The bridge deck has extensions on either side providing an area for 75 cm wide service footpaths.

Each arch plane has 48 steel bar hangers with a diameter of 60 mm. The arrangement of the hangers, which essentially decides the forces and force variations in a network arch, was the subject of an extensive optimisation process. As a result Brunn & Schanack proposed the radial hanger arrangement as shown in Fig. 40g. See next page. In its simplest form it features constant distances of the upper hanger connections along the arch and a constant cross angle between arch and hangers.

The radial hanger arrangement has been applied successfully in many students' works, e.g. Skalda & Rohm (Awarded a prize by the Saxonian Building Industry in 2005), Drange Hole (Norway), Valenzuela (Chile) and Beyer (Awarded the Gottfried-Brendel-Prize 2006 by TU-Dresden). Furthermore it has been the object of scientific studies by Prof. Graße, Dipl.-Ing. Teich and J. Berthellemy. The Flora Bridge over Mittelland Canal at Haldersleben, Germany is the first network arch bridge that will be built with the radial hanger arrangement. See page 35.

The existence of a wind bracing and the radial hanger arrangement leads to very small bending moments so that rolled American wide flange profiles can be applied for the whole arch length. That is W360x420x634 for the middle section and W 360x420x900 for the ends that also form the portal frame columns.

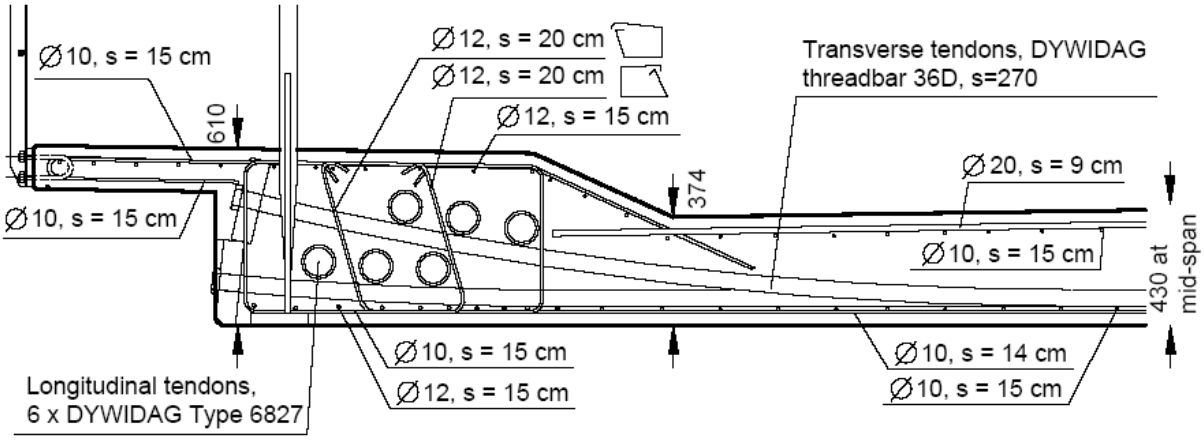

Fig. 40f. Reinforcement for a tie in the railway bridge in fig. 40e

The wind bracing is a K-truss of CHS 219.1x8 profiles. The length of the portal frame columns is reduced by diagonal struts as shown in the front view in figure 40e. A temporary steel chord can be used for the construction.

The bridge with this temporary lower chord weighs less than 400 tons and can be moved. Resting on its final position the steel skeleton can support the formwork and the fresh concrete for the deck. The casting sequence might be different from project to project to avoid hanger relaxation during the construction stages.

The double track railway network arch bridge has been designed according to the specifications of the Eurocode for a maximum train speed of 160 km/h. The total amount of steel is 448 tons, which corresponds to 2.24 tons per track and meter of span. According to Herzog 1975 the reference value for other steel railway bridges with a span of 100 m is about 5.5 tons per track, which is almost 150 % higher.

Brunn and Schanak, 2005, use a very advanced shape of arch and hanger arrangement that leads to very constant axial force in a long middle part of the span. The maximum hanger forces are very equal and near to optimal when it comes to fatigue.

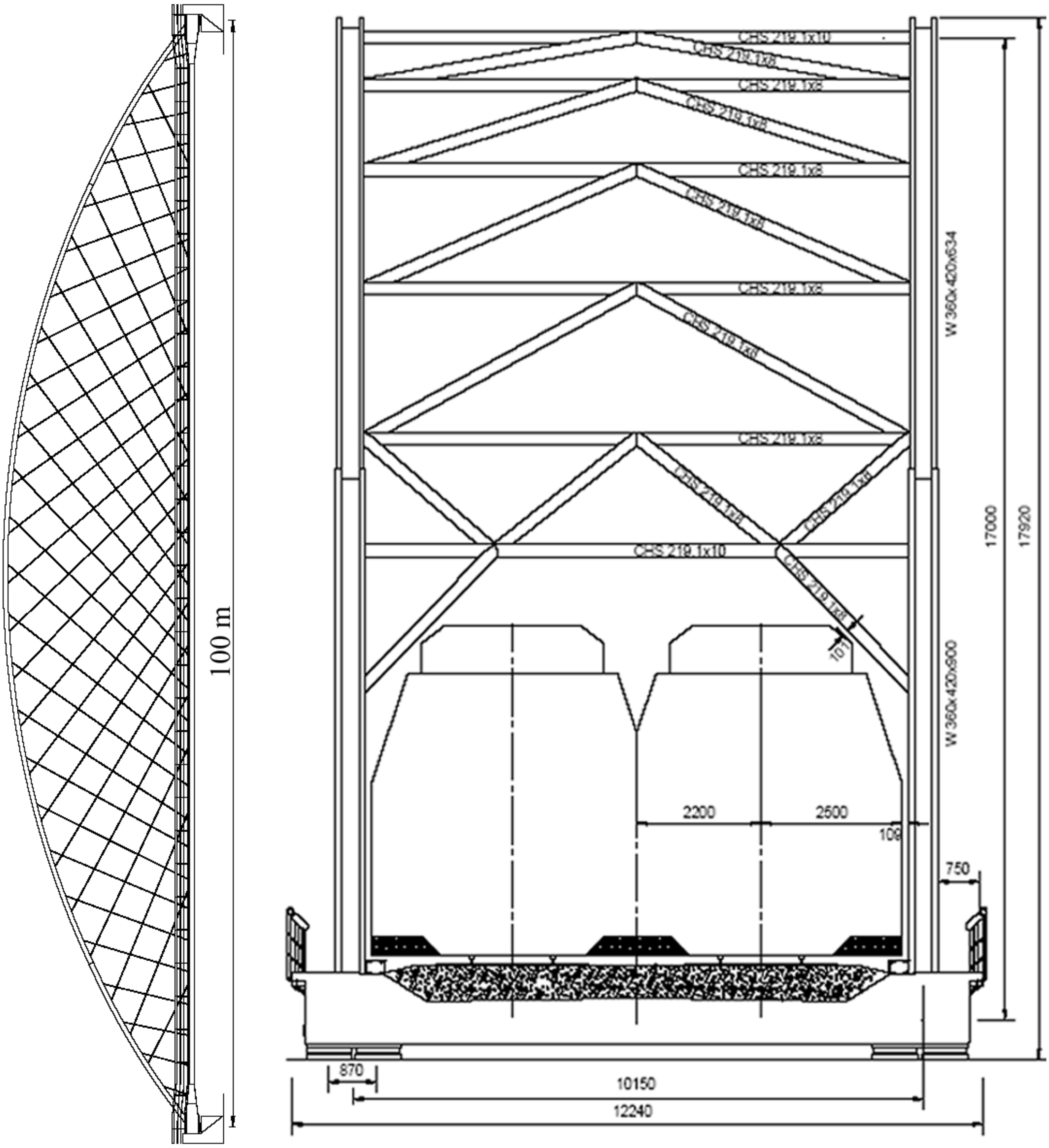

Fig. 40g. This network arch railway bridge was designed by Brunn and Schanack 2003. Their master's thesis was written in English.

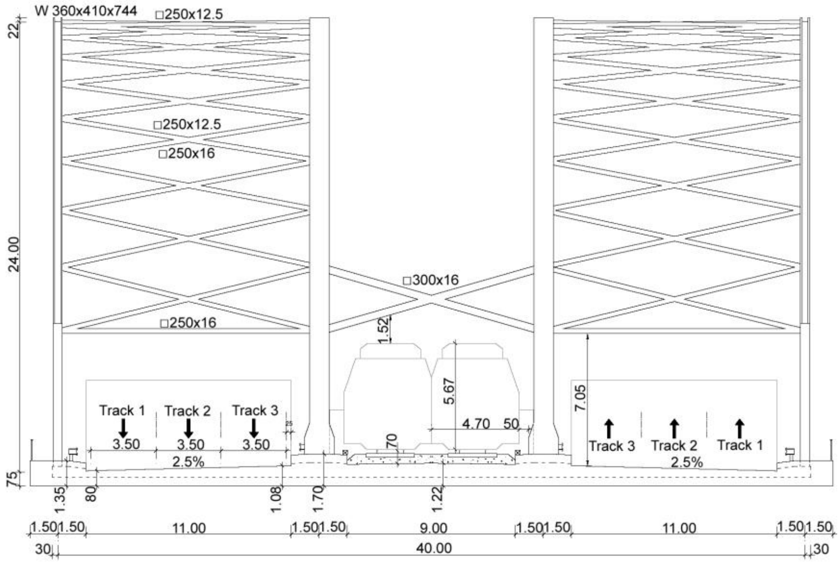

Fig. 40i. Cross-section of a combined road and railway bridge designed by (Räck 2003).

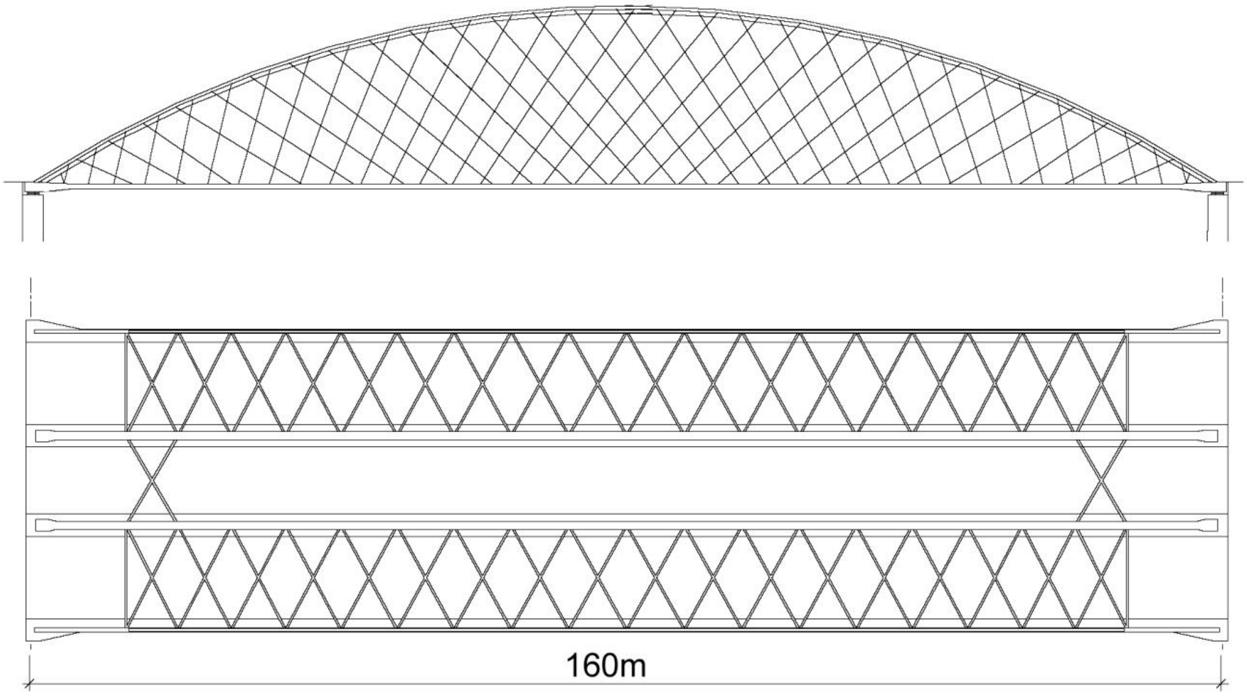

Fig. 40j. Two drawings of the bridge in fig. 31c. See also Räck home.uia.no/pert under the button "Master theses"

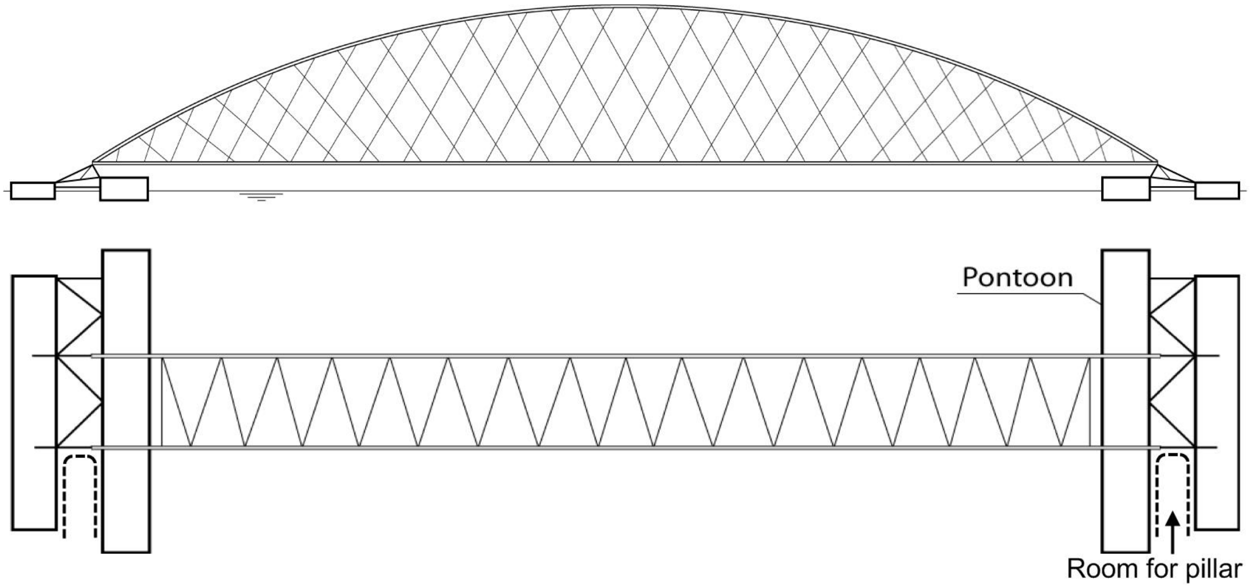

Fig. 40k. How the bridge in fig. 40i and 40j can be transported from the shore to the pillars.

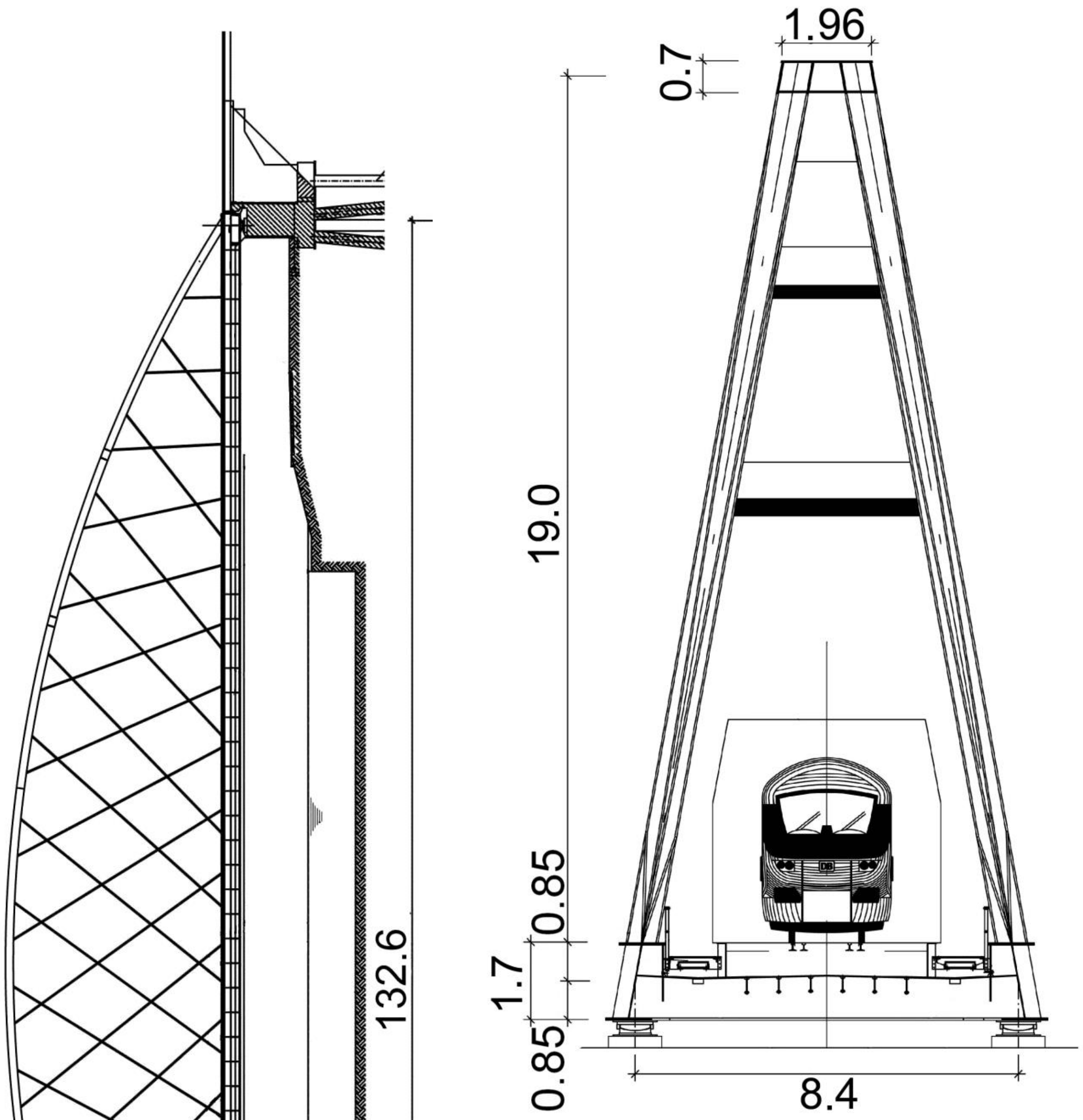

Fig. 40l. Flora Bridge over the Mittelland Canal in Germany.

This railway bridge with a span of 132.6 m was designed by GMG Ingenieurgesellschaft in Dresden. Compared with a similar arch bridge with vertical hangers under the same loading assumptions, clearance diagram, height of construction, arch rise and steel grade a reduction of steel mass from 1405 tons to 1000 tons could be achieved. See Graße and Tveit 2007.

The circular arches have a box cross-section of 700 x 700 mm and a rise of 19 m. The stiffening beams are relatively slender steel beams with one web and a depth of 1700 mm. The orthotropic steel deck connected with the stiffening beams and the 8.4 m span cross beams give the bridge the transverse stiffness necessary for driving dynamics.

The dominant feature of the bridge is the network of 34 inclined hangers per arch instead of the 12 vertical ones. The slope of the hangers varies over the bridge length from 89° to 37°.

This hanger arrangement shows no relaxation of hangers under service loads. The drastic reduction of bending moments in arches and stiffening beams is the main reason for the saving of steel. Since aesthetic aspects were not particularly significant for this railway bridge, hangers with a cross-section of 100x 40 mm were used. Therefore - compared with round hangers - higher fatigue strength of the relatively simple butt welds was achieved.

The hangers are fastened to the inner and outer vertical plates of the arches alternately. So they have a distance at the crossing points, and devices for damping can be built in. The upper flanges of the stiffening beams are connected laterally to their web so that the hangers can be fastened directly to the web. The steel in the network arch has fewer joints than the arch bridge with vertical hangers.

The assembly of the bridge took place beside the railway track. Then the steel skeleton was moved transversely onto the track. Then came a longitudinal launching across the canal by means of a pontoon that could carry 1250 tons.

Vertical planes for the arches and the footpaths outside the hangers would be more economical, but maybe this would not look so attractive. The sloping planes of the arches were adopted from a competing alternative with vertical hangers and can not be blamed on Ingenieurgeselshaft GMG in Dresden, Germany.

Professor Dr. Steffen Marx of TU-Dresden has written this German text on network arch railway bridges. Per Tveit has translated this text into English, making some insignificant alterations in the process.

Many network arches are being planned for the German railways. This is being done by a subsidiary company, DB Projekbau. It has been found that the network arch has the following advantages compared to conventional arch bridges with vertical hangers.

- Considerable savings of steel
- Greater stiffness and higher frequencies of vibrations. This leads to less chance of resonance caused by high speed trains.
- Smaller deflections that give greater passenger comfort
- Where hangers cross, they can support each other in such a way that this counteracts vibrations caused by wind and rain
- More slender chords that lead to a more pleasing appearance.

Network arches have the following drawbacks:

- The slender cords can only take small concentrated loads. Sometimes this makes the erection more complicated.
- The frequent change in the tension in the hangers results in a tendency to fatigue. This must be counteracted by the geometry of the net of hangers and by relatively high fatigue strength in the ends of the hangers.

Professor Marx describes two railway bridges that have been designed:

The Rosenbachtal Bridge

The new bridge will replace 5 arch spans under the railway track because these spans are in poor shape. Compared to the rebuilding of the existing spans, the network arch means lower costs, better appearance and little damage to the valuable natural surroundings.

A single track bridge spanning 98 m is planned. It has an orthotropic steel tie. The superstructure needs 591 tons of steel. Compared to a conventional arch bridge with vertical hangers it saves 123 t of steel.

The network arch is erected in a field parallel to the railway track. Then it is moved sideways onto the track and rolled to the site. The railway traffic is stopped for three months while the existing bridge is dismantled and new abutments are built. The bridge was finished in October 2008.

Railway bridge over the national highway B6 in Halle

A network arch was built over the national highway B6 at the edge of Halle. See figs 40m and 40n. It is on a track used by freight trains. Thus it will often carry heavy traffic loads. The arch has a span of 78 m. It will have a concrete track in the tie between two longitudinal steel beams. The slope of the hangers varies from 83° to 52°. The slope in the middle is 62°.

The concrete tie provides many advantages compared to a steel tie.

- Considerable saving of steel
- Higher sideways stability
- Higher constant hanger force
- No corrosion protection required in the concrete tie

Additional advantages are the same as in other network arch railway bridges.

A simpler tie could be used if the concrete could resist the salt used on the track in the winter. Maybe the most exposed concrete could be covered by an epoxy membrane. The hangers and the windbracing are fastened to the arches in a simple way.

Some of Prof. Marx's comments are included in the description of the Flora Bridge. See pgs 35 and 36

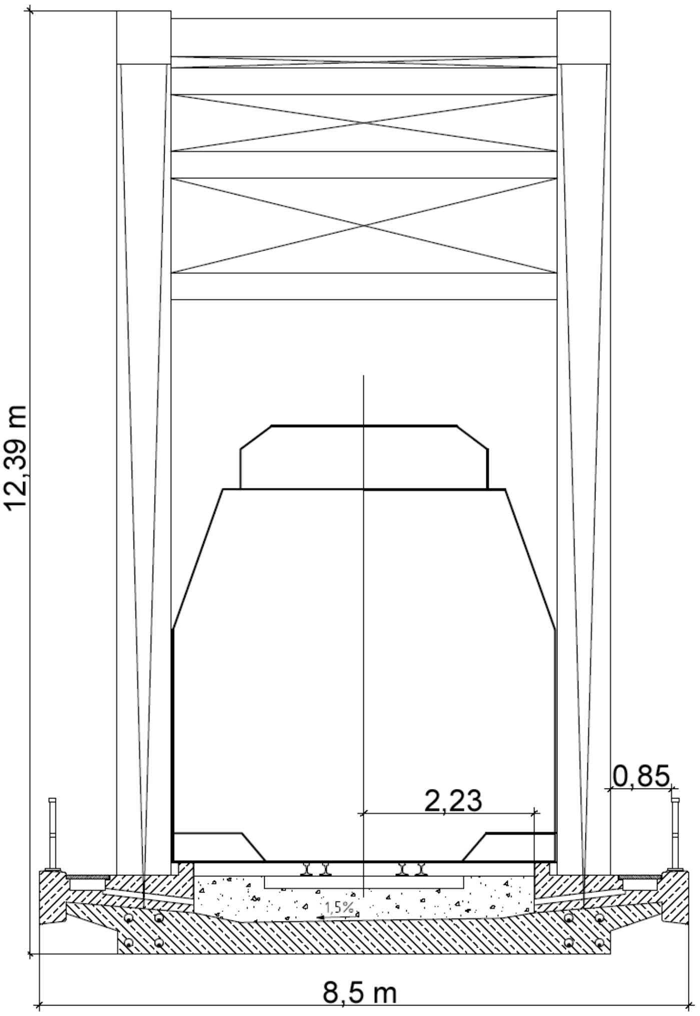

Fig. 40m. Shows an early suggestion by Prof. Marx for a cross-section of the railway bridge over B6 at Halle

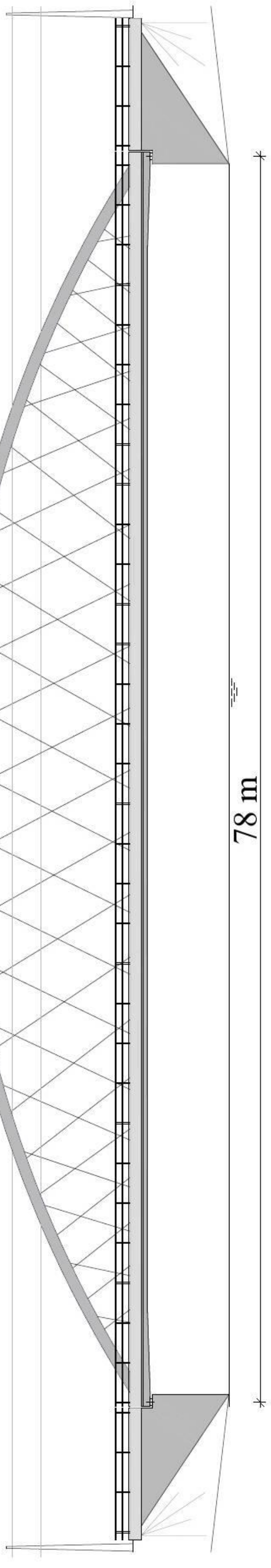

Fig. 40n. A network arch railway bridge built over national highway B6 at Halle

Some work on network arch railway bridges mainly before 1974.

In 1971 a group of Englishmen, Majid et al. 1971, published an article with the title "The Design of Inclined Tied Arch Railway Bridges over the M57". Among other things they concluded that inclined hangers were not as good as vertical hangers.

The author wrote a contribution to the discussion, Tveit 1972, where he presented influence lines and structural details, pointing out that the inclined hangers should have multiple intersections in order to be efficient. He also showed that, by using network arches, half the steel weight could have been saved for the two bridges presented in a paper by Gut 1971.

Majid et al. replied that complications in design and difficulties in the replacement of hangers were the reasons why inclined hangers had not been used. Needless to say the author does not agree with this reasoning.

The debate with Majid et al. subsequently inspired the author to write a more extensive report on a double track railway bridge spanning 65 metres. Tveit 1973. The drawings in figs 44 to 47 in this publication were exquisitely drawn by Henrik O. Madsen, a neighbour's son at the time. He is now head of Det Norske Veritas. The drawings can give valuable understanding of how network arches function. The same goes for figs 91 to 96.

For the design structural steel with a yield strength of 355 MPa and concrete cube strength of around 50 MPa were assumed. The steel quantities were 103 tons for the superstructure and 59 tons of reinforcement for the concrete tie. Most of the reinforcement was prestressing steel. The temporary lower chord for erection used 26 tons of structural steel.

All the data given are for half of the bridge. The weight of the concrete tie is 5 tons/m. The train carriages weigh 8 tons/m and the locomotive weighs 11 tons/m. The load factors in the ultimate limit state are for the dead load 1.2 and for the live load 1.6. A dynamic load factor for the live load has also been used.

The diagrams have been computed using linear methods. Hangers in compression have been removed. Loads and codes have changed considerably since the beginning of the 1970's, but still it is the author's hope that the diagrams will be of use to anybody who wants to design a network arch railway bridge.

A mechanism for adjustment of the hangers on fig. 43 is probably too complicated, but the way the prestressing cables are fastened to the lower end of the hangers should not be forgotten. These transverse rods should be prestressed at an early stage. The author fears that it would be difficult to produce the arches in fig. 42. Instead of the suggested arch a single universal column could have been used. See (Schanack 2009), (Teich 2004) and (Teich and Graβe 2004) treat fatigue in hangers.

On page 44 the load is symmetrical about the central axis of the bridge. On the right hand side the hangers in compression have been removed before recalculation. For the sake of argument the hangers on the left-hand side have wrongly been supposed to take compression. On the right-hand side the moments are bigger.

On the left-hand side nearly all hanger forces are bigger than on the right. This is a useful general trend that makes it always on the safe side to use influence lines for calculating hanger forces, even though the influence lines have been calculated assuming that the hangers can take compression.

In a letter to the author, Professor Niels J Gimsing of DTH Denmark, points out that the change in the maximum load in the hangers of a railway bridge comes more abruptly than in a road bridge. This might give harmful effects if the hangers of railway bridges are allowed to relax in the serviceability limit state.

The author agrees that the changes in the load in the hangers of railway bridges come more abruptly than in road bridges. It will not cost much to avoid the hangers in railway bridges relaxing in the serviceability limit state. See Brunn and Schanack 2003. Such a practice is recommended. See also pp. 27, 29i, 67 and 68. Stephan Teich's doctoral thesis, published in 2012, have valuable information on how the slopes of hangers influence their resistance to relaxation. See page 29j.

The hangers in the bridge on pp. 31a and 37 will not relax in the serviceability limit state. It is for future designers of railway bridges to calculate whether there will be harmful shocks in the hangers of their railway bridges. They have to consider how fast the load increases in hangers that have relaxed. Other factors are the frequencies of vibration in the hangers and in the whole span.

Cross-sections of half bridge:

Arch:	1– 3 and 49–50	F=8.65 dm^2	I= 44 dm^4	E=2100t/cm^2
	1– 9 and 46–49	F=7.99 dm^2	I= 40 dm^4	E=2100t/cm^2
	9–15 and 37–43	F=7.33 dm^2	I= 36 dm^4	E=2100t/cm^2
	15–37	F=6.91 dm^2	I= 31 dm^4	E=2100t/cm^2
Lane:		F=205 dm^2	I=280 dm^4	E= 350t/cm^2
Hangers:		F= 28 cm^2		E=1500t/cm^2

These data were used for the computer calculations

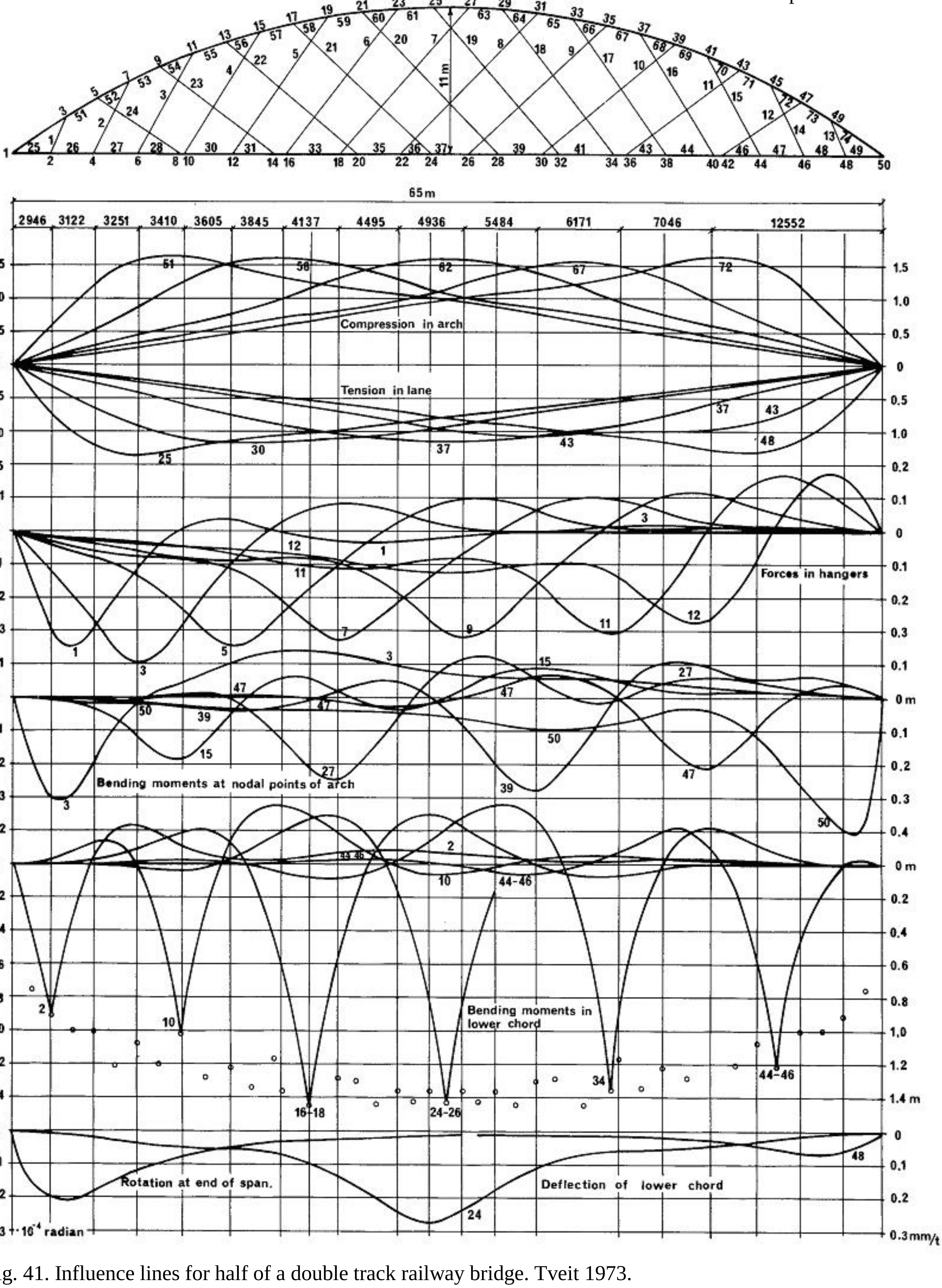

Fig. 41. Influence lines for half of a double track railway bridge. Tveit 1973.

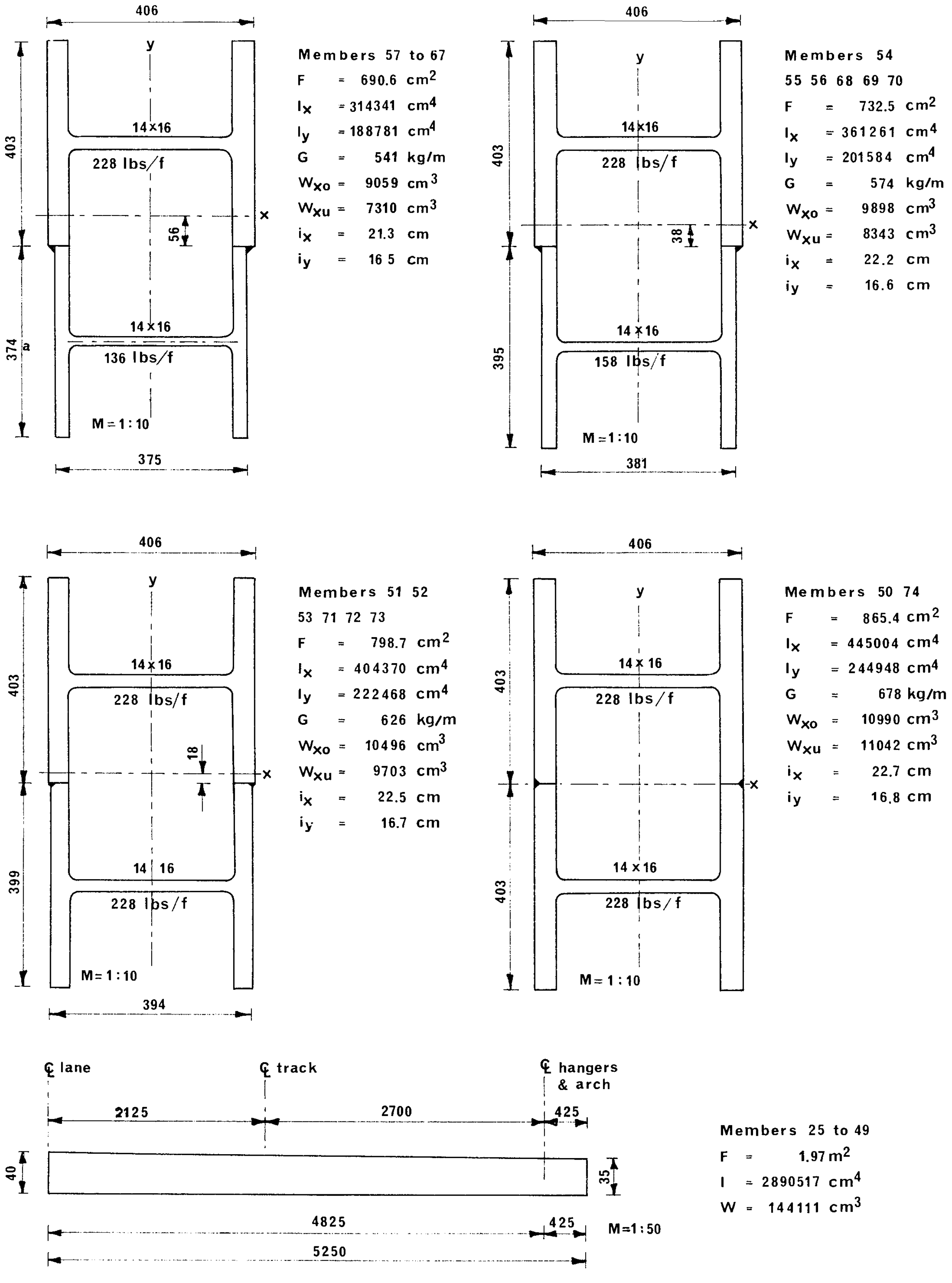

Fig. 42. Cross-section of arch and lane for suggested double track railway bridge. (Tveit 73).

Increased knowledge of buckling speaks for single American wide flange beams in the arches.

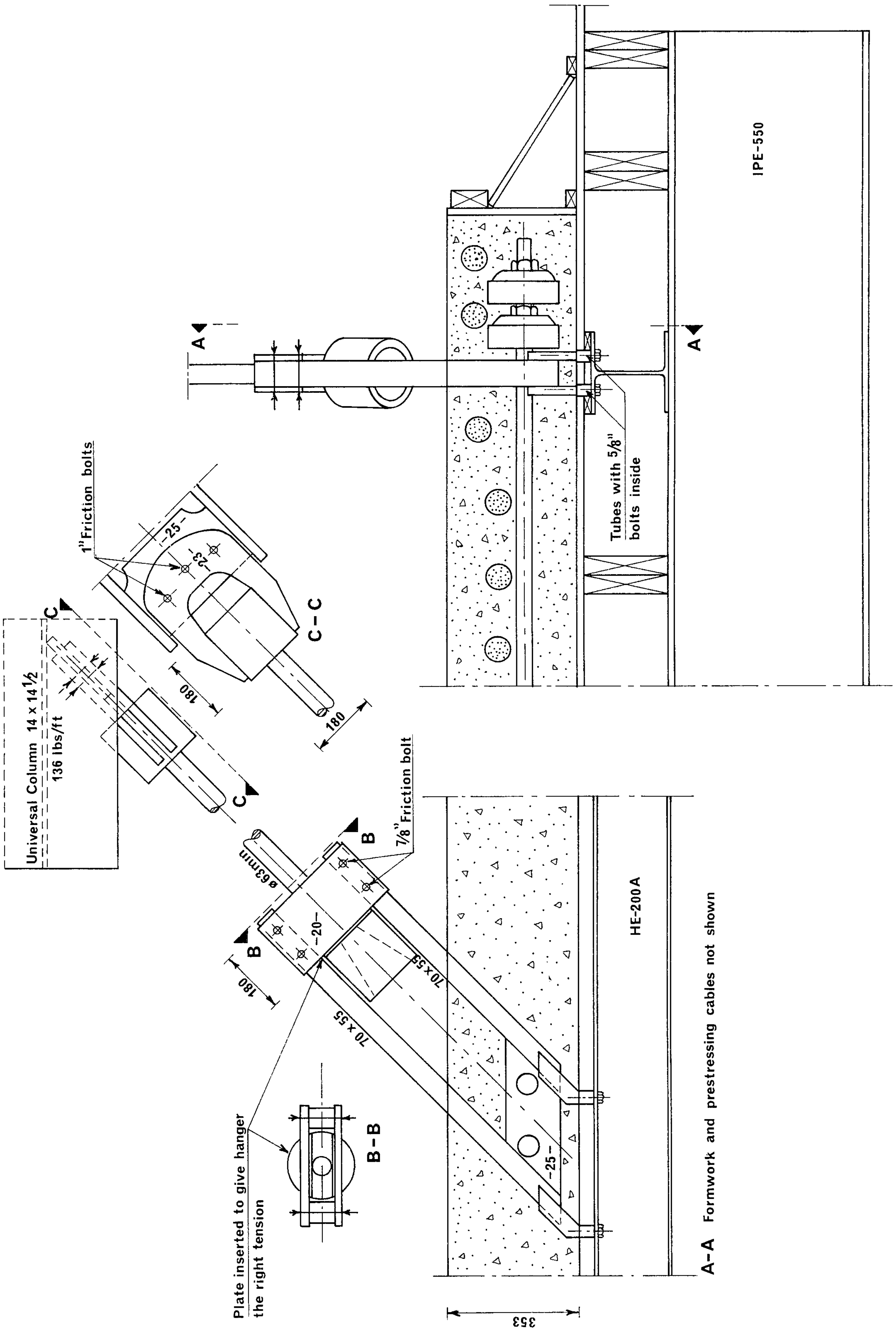

Fig. 43. Tveit 73. Upper and lower ends of hangers with some details of slab and formwork.

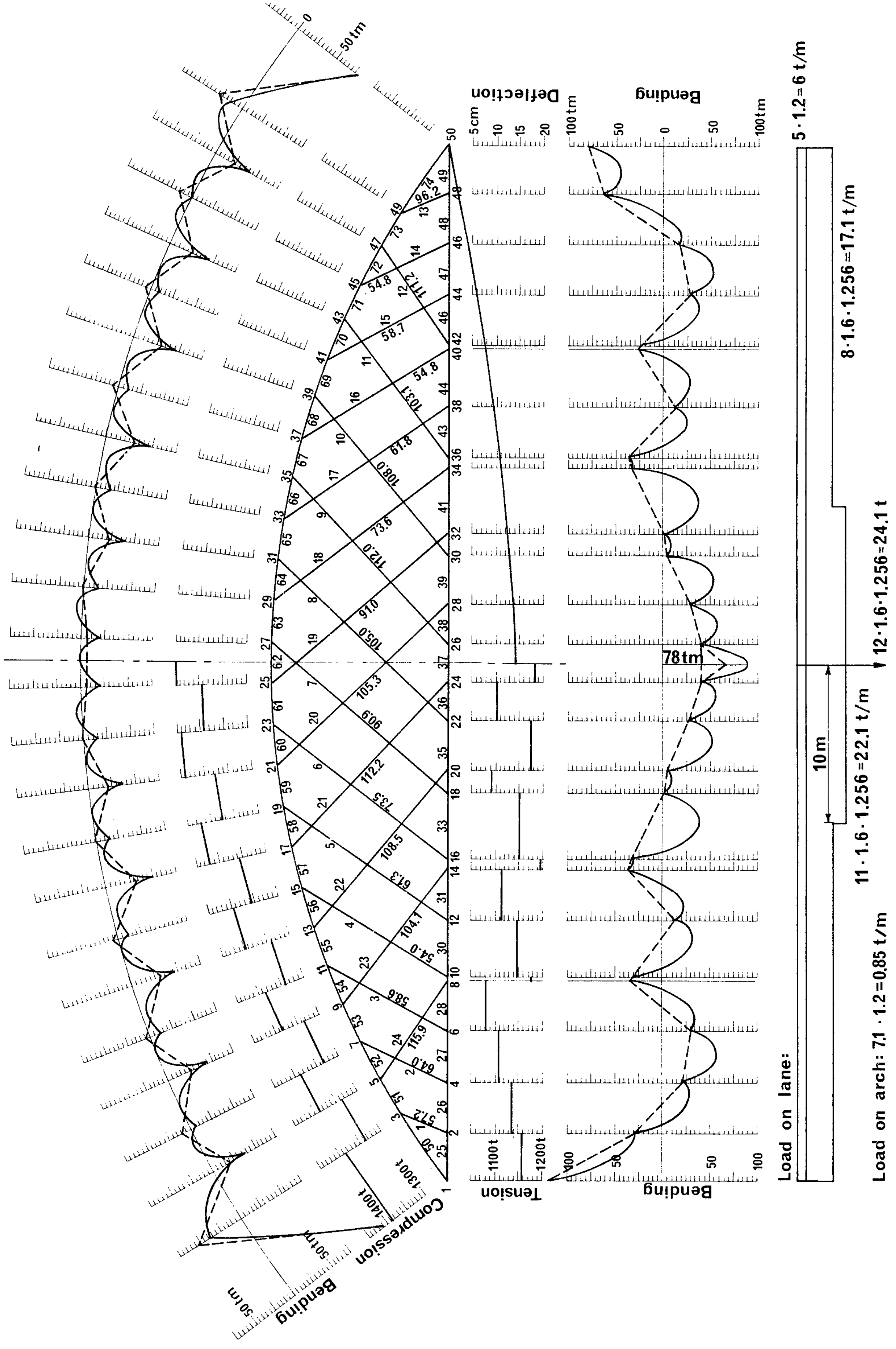

Fig. 44. Forces due to maximum symmetric load. On the right hand side of the diagram bending and hanger forces are also due to 5 mm shortening of hangers 1 and 13. Such a shortening of the last hanger is normally a good idea. It gives less bending in the chords at the ends of the span and a better utilization of the capacity in the hanger nearest to the end of the span.

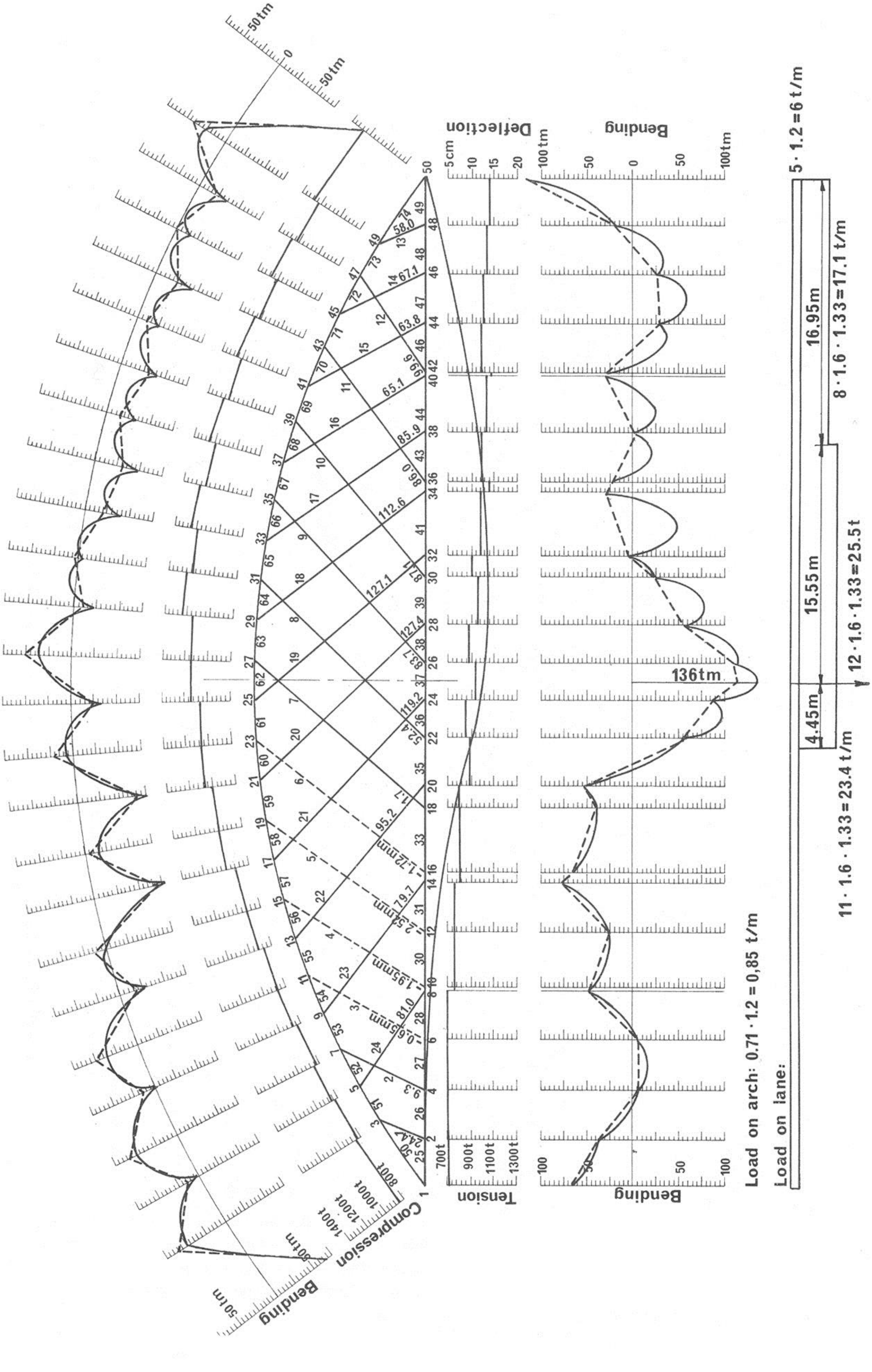

Fig 44a. Forces due to a skew load producing maximum bending in the middle of the bridge

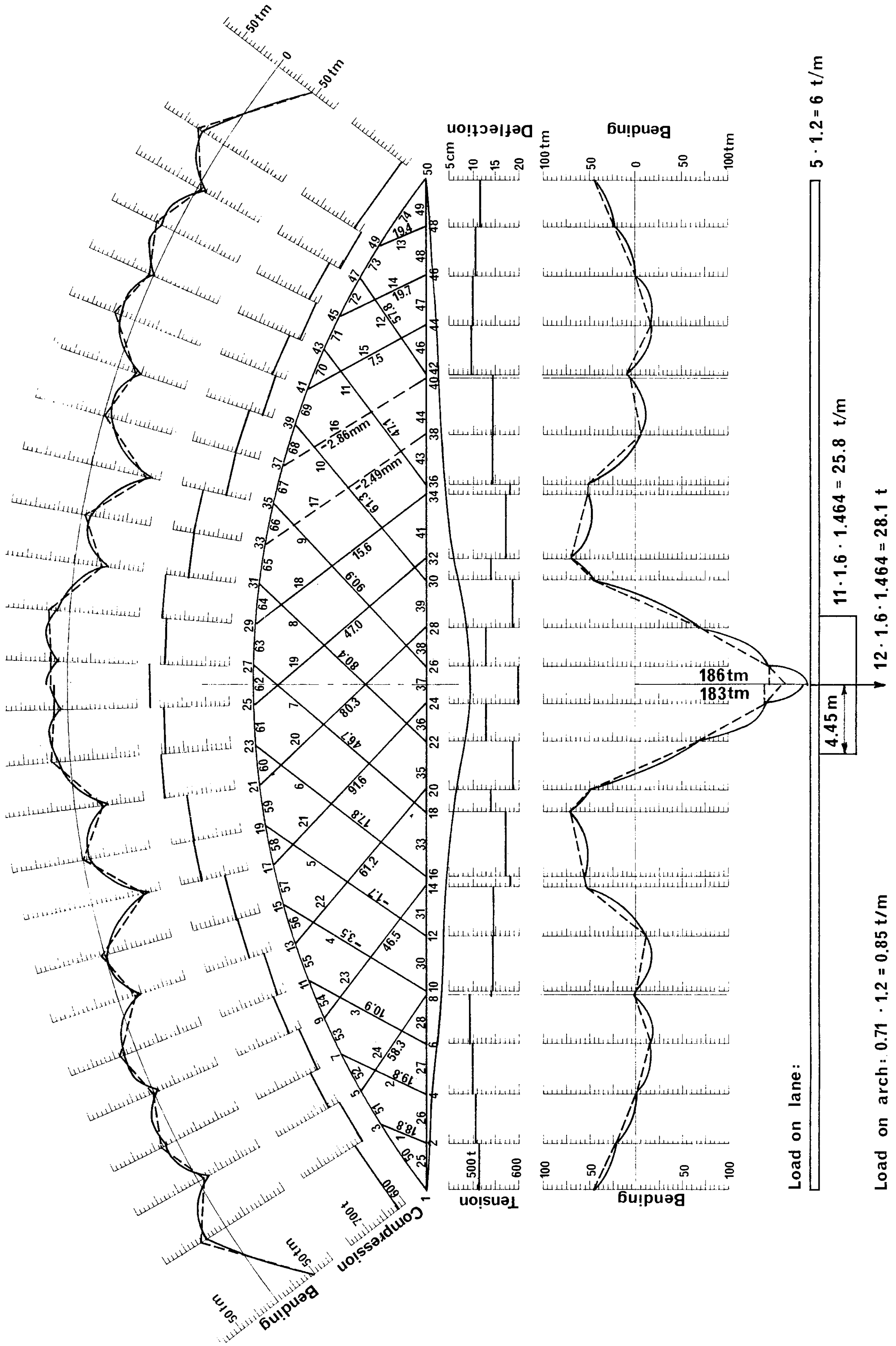

Fig 45. Forces due to the loading that gives maximum bending in member 37. The left side of the diagram gives the forces if the hangers are able to take compression. The right side gives the forces when hangers relax.

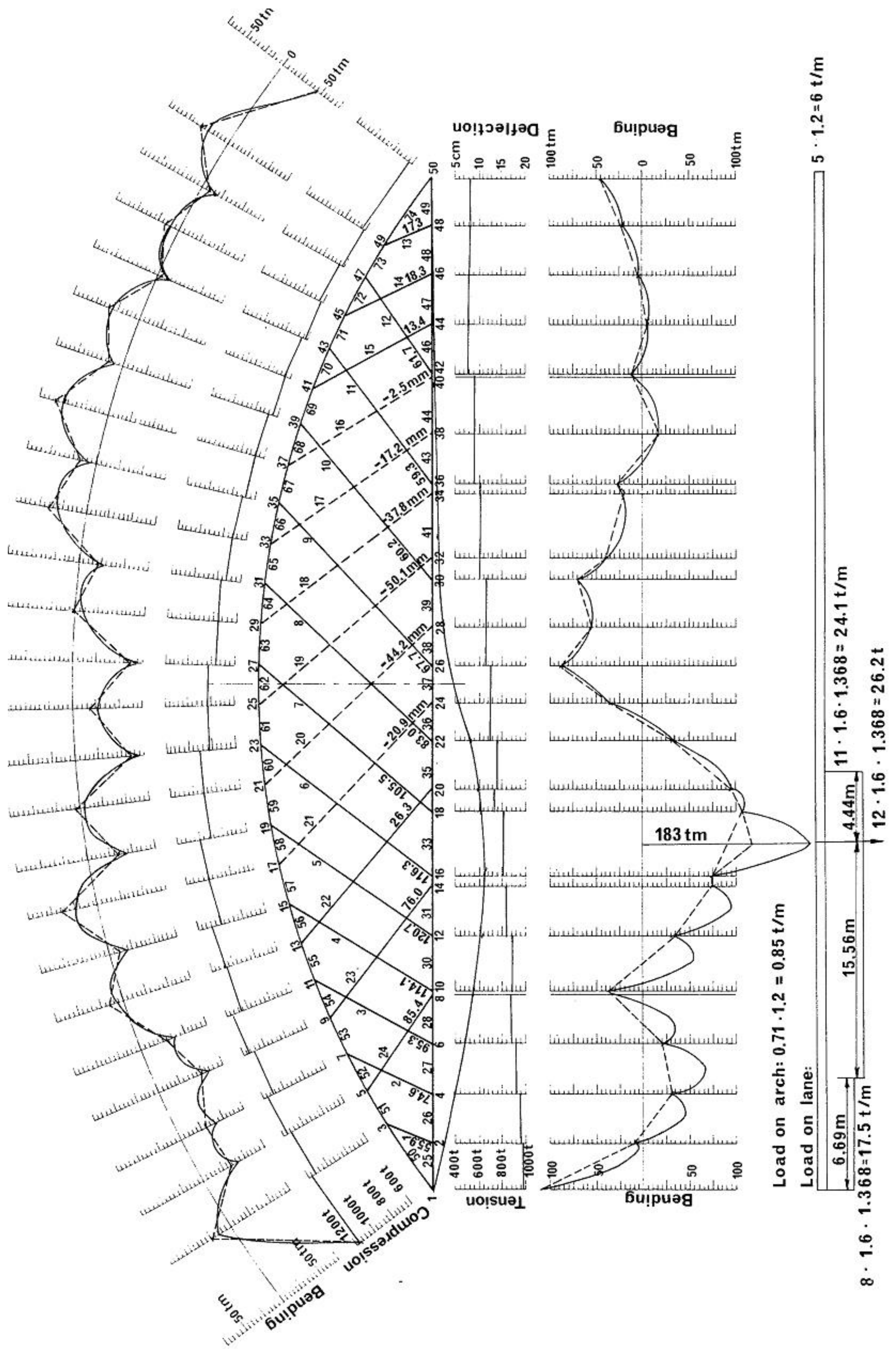

Fig. 46. Forces due to the short skew load that produces maximum bending in member 33

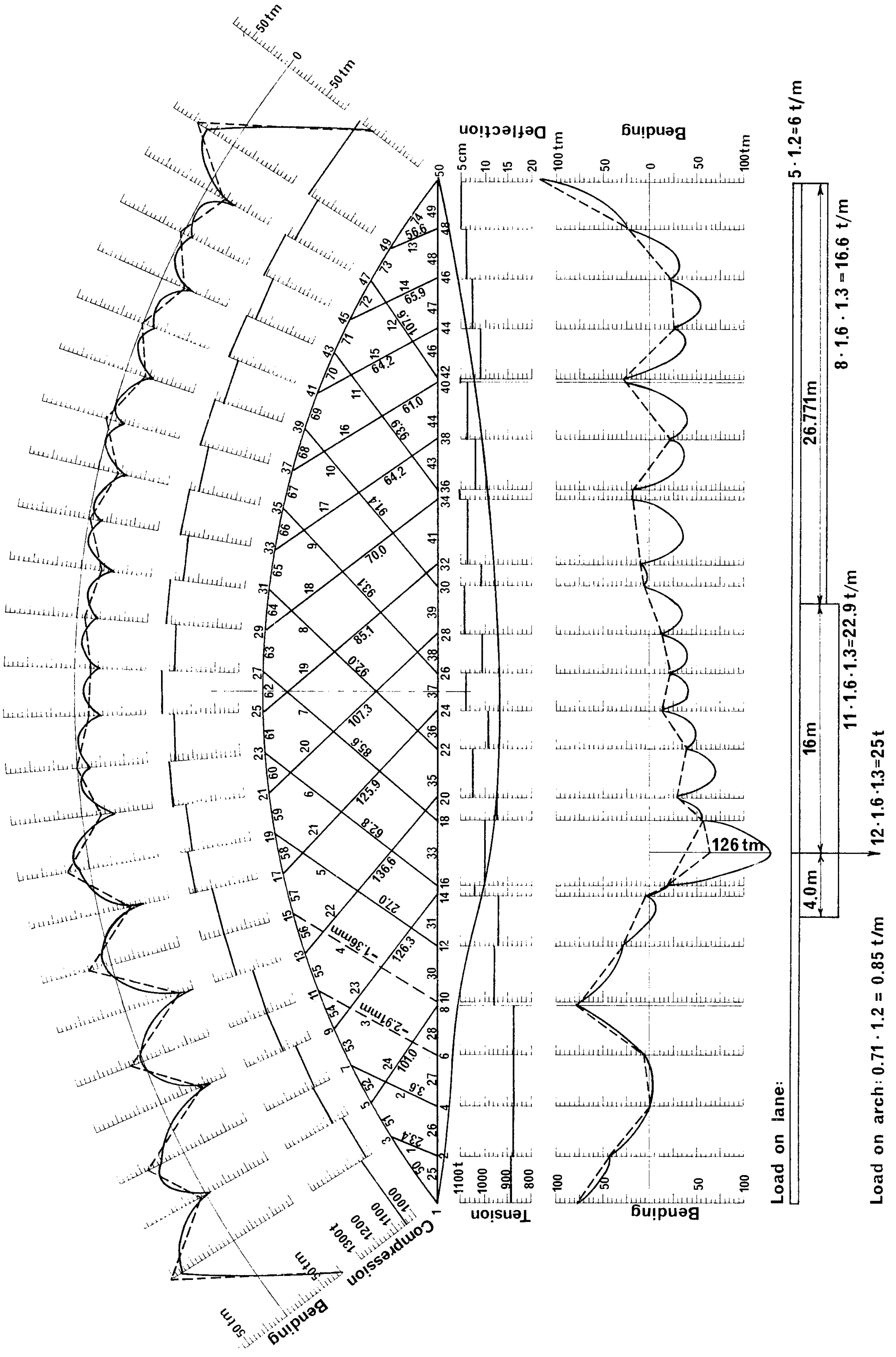

Fig. 47. Forces due to the long skew load producing maximum bending in member 33

NETWORK ARCHES MADE OF PRESTRESSED HIGH-STRENGTH CONCRETE

Until 1950 nearly all arch bridges with inclined hangers had concrete arches. This made sense because concrete is good at taking the compression that is predominant in the arch. Later most arches have been made from steel. This has kept the scaffolding cost down and has simplified erection.

Where many equal spans are needed, it might be economical to use concrete in the arches. High strength concrete is efficient at carrying big compressive forces in stocky members. To keep the cost of formwork down, the spans can be cast on land to be moved onto the piers. The drawings in fig. 48 are for a possible network arch spanning 100 metres. (Tveit 1980b).

The slab lane and the traffic barriers are cast in one piece. The slab is reinforced in two directions by means of pre-tensioned wire. To cut scaffolding costs elements of arches with pre-tensioned windbracing can be cast on ground level.

The network arch will weigh ~1000 tons and can be moved to bridge piers by means of floating cranes or by two big pontoons. If the lane of the bridge is to be less than 10 metres above sea level, it seems feasible to slide the spans sideways from pontoons to piers. See fig. 2 in fig. 48.

During this sliding process, pontoon and pier must be fastened to each other. The buoyancy of the pontoon must be adjusted to compensate for the shifting of the weight of the span. Finally hydraulic jacks can be used for removing the temporary steel rail and installing the permanent bearings.

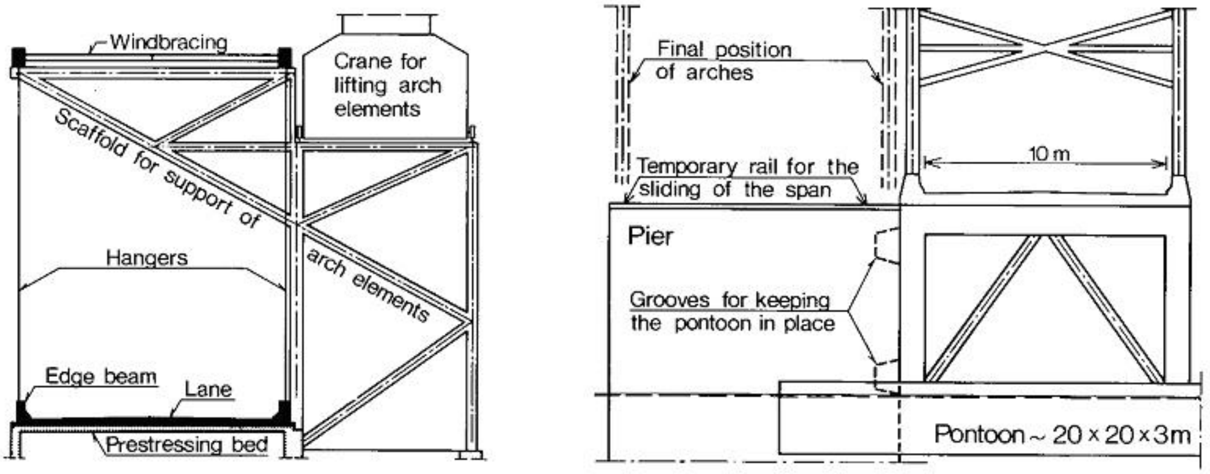

Fig. 1. Cross-sections of rig for casting of the lane, edge beam and joints in arches

Fig. 2. Pontoon and pier with the span on the pontoon ready for transfer

Fig. 48. Production site and transport of network arch made of concrete. Drawings from (Tveit 1980b)

In 1980 the author, (Tveit 1980b), wrote: “For a long bridge the above arrangement would have these advantages: Low weight and a high degree of prefabrication, which would give low labour and material costs and good control of workmanship.” Two developments favour this way of doing things. Over the last 28 years available concrete strength has nearly doubled and skills and equipment for moving heavy loads have increased.

The author has made some simple calculations for the bridge from Rødby to Puttgarden. See fig. 49 next page. A similar arrangement of lanes has been indicated by (Räck 2003). See page 34. Calculations for (Tveit 1996) have been updated. His ideas will not be used for this bridge, but maybe some day somebody will have the good sense to use them in other projects.

There is more on the all concrete bridge over the Fehmarn Belt in (Tveit 2009a) and in (Tveit 2010a).

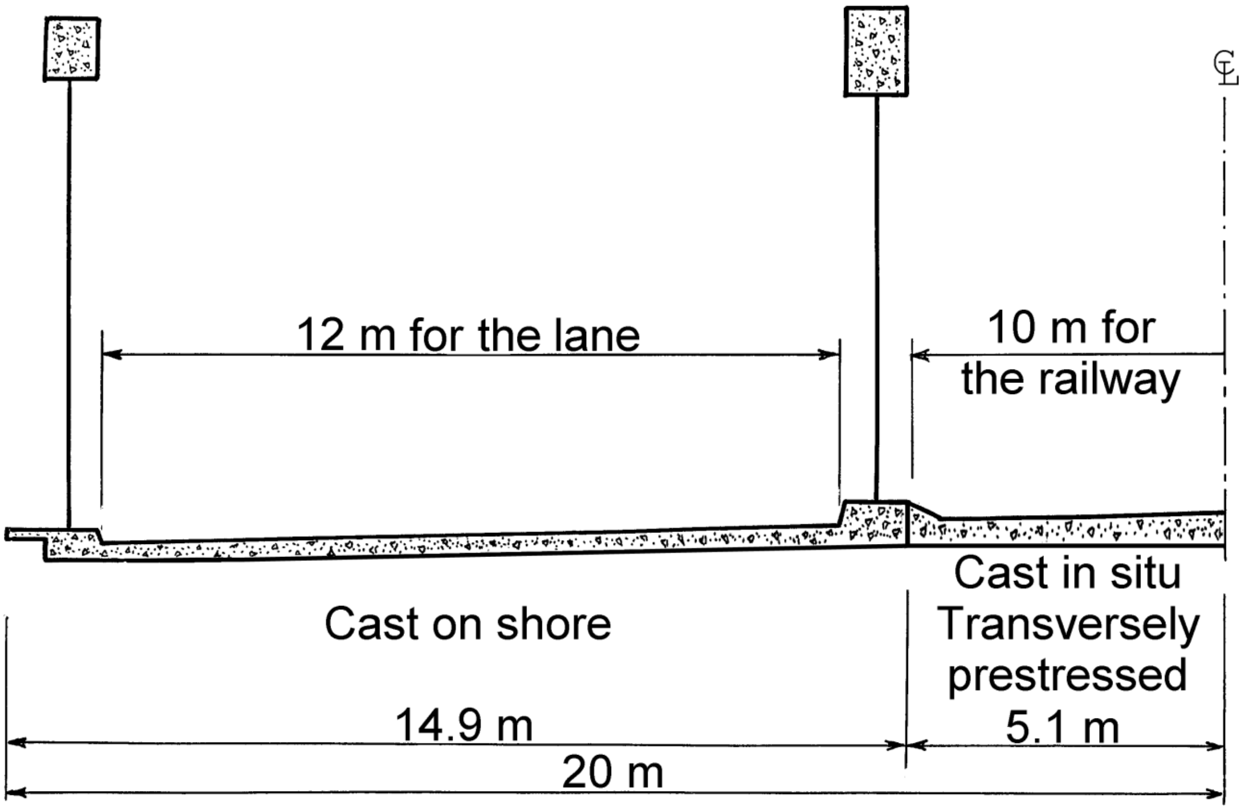

Fig. 49. Cross-section through half a network arch with a span of 215 metres. Tveit 1999.

The bridge will be around 19 km long. For the calculation the distance between the centres of the piers has been assumed to be 220 metres. For the deck, a cube strength of 65 or 75 MPa has been assumed. With such concrete strengths the slabs can be made thinner than shown in fig. 49. For the arch cylinder strengths of over 100 MPa should be considered. A concrete strength of 140 MPa was used in the Millau Bridge in France.

Two concrete arches with 12 metres of lanes between them are cast on shore. Pairs of arches 18 metres long with the windbracing between them can be cast on ground level. These pairs of arches are joined together by steel plates perpendicular to the axis of the arches. See fig. 19 page 12. The arches can also be cast in a permanent form. Then the spans can be lifted out after the casting and the prestressing are finished.

The prefabricated spans can be lifted onto the pillars by cranes or transported to the piers on the pontoons shown on fig. 51 on the next page. Temporarily they can be put down on a ledge a few metres above the sea level. See fig 50. Then they can be lifted to the top of the piers up to 65 m above sea level and pulled 1.5 metres sideways onto the corbels for the bearings.

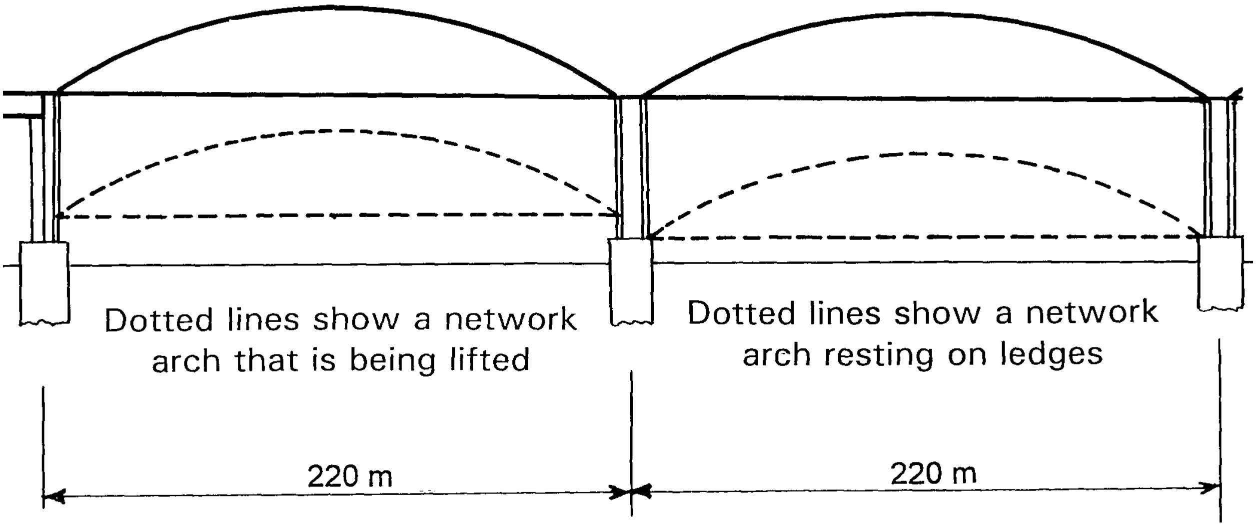

Fig. 50. Two network arches seen from the side. Tveit 1996.

To make it possible to lift the span past the outer corbel, there has to be a cut-out in the plate and the transverse beams at the ends of the spans. When the span is in place, the windbracing above the railway lines is installed. Simultaneously the cut-out in the transversal beams and at the end of the plate is cast and prestressed transversally to the axis of the span.

Then the plate under the railway is cast and prestressed. Finally a plate between the two spans is cast on the top of the pier. The structure under the railway and the windbracing above it can be made of steel. This will give a simpler and faster erection.

Fig. 51 shows various stages in the erection of the spans around a pillar. The first, fourth and a bit of the second quadrant show a pontoon for transporting the spans from the shore to the piers. Each of the pontoons can lift 2000 tons. The pontoons can be joined together for putting the substructure of the span in place. The substructure will probably have to be cast in a dry dock.

The third quadrant shows the contour of a span that rests on a ledge on the pier 5 to 10 metres above sea level. Note the cut-out for lifting the span past the corbel for the outer bearing of the span. The second and the third quadrant show the cross-section of the pillar above the ledge for the transport of the span. The fourth quadrant indicates the contour of the crane for lifting the span in place. The first quadrant shows a completed span in place. Only the plate spanning the pier is missing.

The best solution might be to lift each span into place by two big floating cranes.

The Eurocode ENV 1991-3: 1995 gives no limits for deflection of railway bridges spanning more than 120 metres. Preliminary calculations of deflection for the 200 metre span made of prestressed concrete suggest a deflection compatible with high train speeds. This is hardly surprising because the network arch is very stiff. See influence lines of deflection on pages 41, 57, 58, 60, and 72. Furthermore, the concrete arches are stiffer in the longitudinal direction than steel arches. The concrete tie gives less bending than steel ties because it has greater longitudinal stiffness. Most of the concrete in the tie is in compression all the time. The pages 49 to 49 have been the same since 2000. Lately the author has initiated work on the side spans of a Fehmarn Belt Bridge. Tveit 2009a, Tveit 2010a.

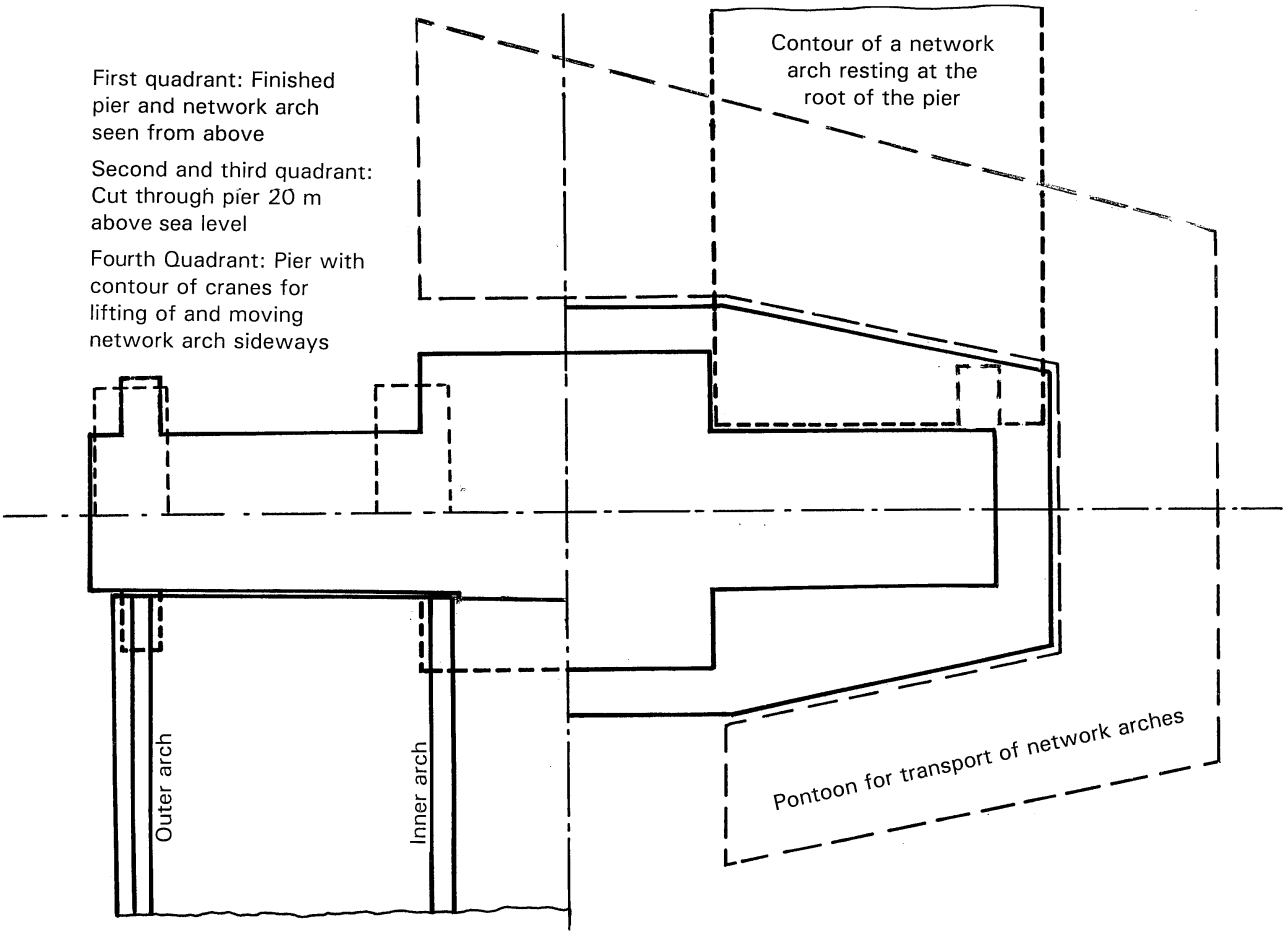

Fig. 51. Plan of a pillar divided into four quadrants

If terrorists want to damage the network arch, they will have to destroy many hangers before a span collapses. See p. 22. The arch is so solid that it will be very hard to blow it up, but skilled terrorists with enough explosives can blow up most bridges. Railings to protect the hangers can be made of steel and be part of the load-carrying structure that is not needed to carry accidental loads. These railings should be easy to repair. About the breaking of hangers see also p. 22.

Normally bridges without structural members above the deck are preferable because traffic on those bridges can derail without damaging the structure. Because of possible savings, the network arch should also be considered for bridges where there is room for the structure under the deck. Possible savings are indicated by the table below where beam and network arch alternatives for the West Bridge in the Great Belt Link, Fries 1990, are compared. Many alterations to page 47 to 50 will probably be made later.

COMPARISON BETWEEN THE BEAM AND NETWORK ARCH ALTERNATIVES FOR THE WEST BRIDGE IN THE GREAT BELT LINK.

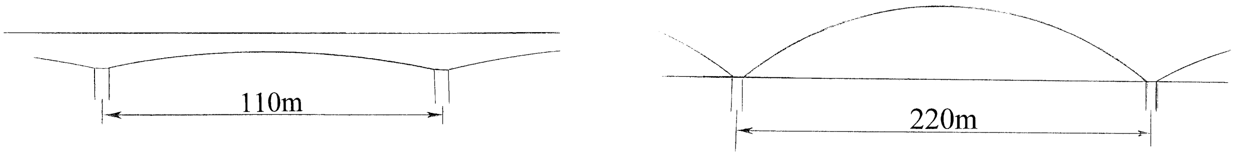

Max. weight of beam element:	5800t	Max. weight of arch to be moved	<4000t
Weight of concrete per m:	100%	Weight of concrete per m:	45-55%
Weight of reinforcement per m:	100%	Weight of reinforcement per m:	50-75%
Bridge piers per m:	1/110	Bridge piers per m:	1/220
Forces on bridge pillars per m:	100%	Forces on bridge pillars per m:	45-55%
Cylinder strength of concrete:	55MPa	Cylinder strength of concrete in tie:	55-65MPa
		Concrete strength in arches:	~110MPa
Price of substructure:	100%	Price of substructure:	50-75%
Price of superstructure:	100%	Price of superstructure:	60-80%

Fig. 51a

Savings in price: 25 to 30%

STRENGTHENING OF NETWORK ARCHES ALREADY BUILT

It is never easy to strengthen an existing bridge. The network arch is no exception, but in some cases it can be done. If the lower chord is a concrete slab it can be strengthened by transverse tension members under the slab. This speaks for using the concrete slab between the arches. If the deflections of the slender slabs become too big, it can be counteracted by tensioning the transverse tension members under the tie.

The tension members can be fastened to anchors glued to the lower outside corner of the slab. They can be stressed through ordinary tensioning or by putting a kind of wedge between the slab and the tension member. The wedges should make the tension in the transverse member counteract some of the bending in the slab due to dead load. The tension members could be steel rods, wires or fibre reinforced polymers. The transverse tension members will strengthen the slab so that bigger vehicles can pass over the bridge. See http://home.uia.no/pert under the button “Systematic Theses” fig. G1.

If the arch is a universal column like in figs 40e on p. 33 and fig. 97 on p. 93 it can be strengthened by welding a steel plate on top of the arch. Then the arch can take a bigger axial force. The plate will increase the bending capacity in the arch. The longitudinal bending capacity in the lower chord will also increase, a little.

An outside tensile member can strengthen the lower chord, but if such a member has not been taken into account in the design of the bridge it will be difficult to fasten the tensile member at the ends.

BUCKLING IN THE ARCHES OF NETWORK ARCHES

Today we would calculate stresses in the arch of the network arch up to the prescribed load using realistic modules of elasticity and usual factors of safety. Realistic deviations from the ideal shape of the arch should be assumed. This makes most of my work on buckling of network arches irrelevant. It is my impression that my designs and conclusions will probably still be roughly valid. Very interesting work on the buckling of network arches can be found at Schanack 2009. In his Dr.Ing. thesis Stephan Teich, Dresden write a lot about buckling of network arches. Teich's doctoral thesis can be found at this address:
http://www.qucosa.de/fileadmin/data/qucosa/documents/8604/Dissertation_Teich.pdf
Teich found that buckling out of the plane of the arch is normally decisive. Normally the arch would come to the building site in bigger pieces. That would make the steel structure supporting the erection of the arch simpler. See fig. 102 p. 94a.

ERECTION OF THE STEEL SKELETON ON SIDE-SPANS OF THE SKODJE BRIDGE

Fig. 33 on p. 20 shows the proposed Skodje Bridge. Fig. 57 on p. 51 shows a sketch of the steel skeleton for the Skodje Bridge erected on a side-span. The Cuplock scaffolding system has been applied. The scaffolding has intermediate supports that prevent the hangers from sagging. A mobile crane travelling on the side-span is used for the erection. The erection starts nearest to the fjord.

Erection is simpler if the side-spans and the approaching road have the same vertical curvature as the main span. While the steel skeleton is being erected, it might be practical simultaneously to put in the wood of the formwork. The side-span would be a convenient working platform. When the temporary lower chord and the arch and hangers have been erected, the Cuplock scaffolding is removed. Then gaps in the formwork for the concrete lane can be filled in.

The prestressing cables could take some of the tensile force in the tie during the transport of the steel skeleton across the fjord. It is easier to put in some reinforcement before the prestressing cables are put in. How much reinforcement should be put in while the steel skeleton rests on the side spans depends in part on the size of the pontoon which is to move the steel skeleton over the fjord. After the span has been lifted in place and the arch is made continuous across the fjord, an expansion joint is opened above a column at one end of the arch. See fig. 33 page 20.

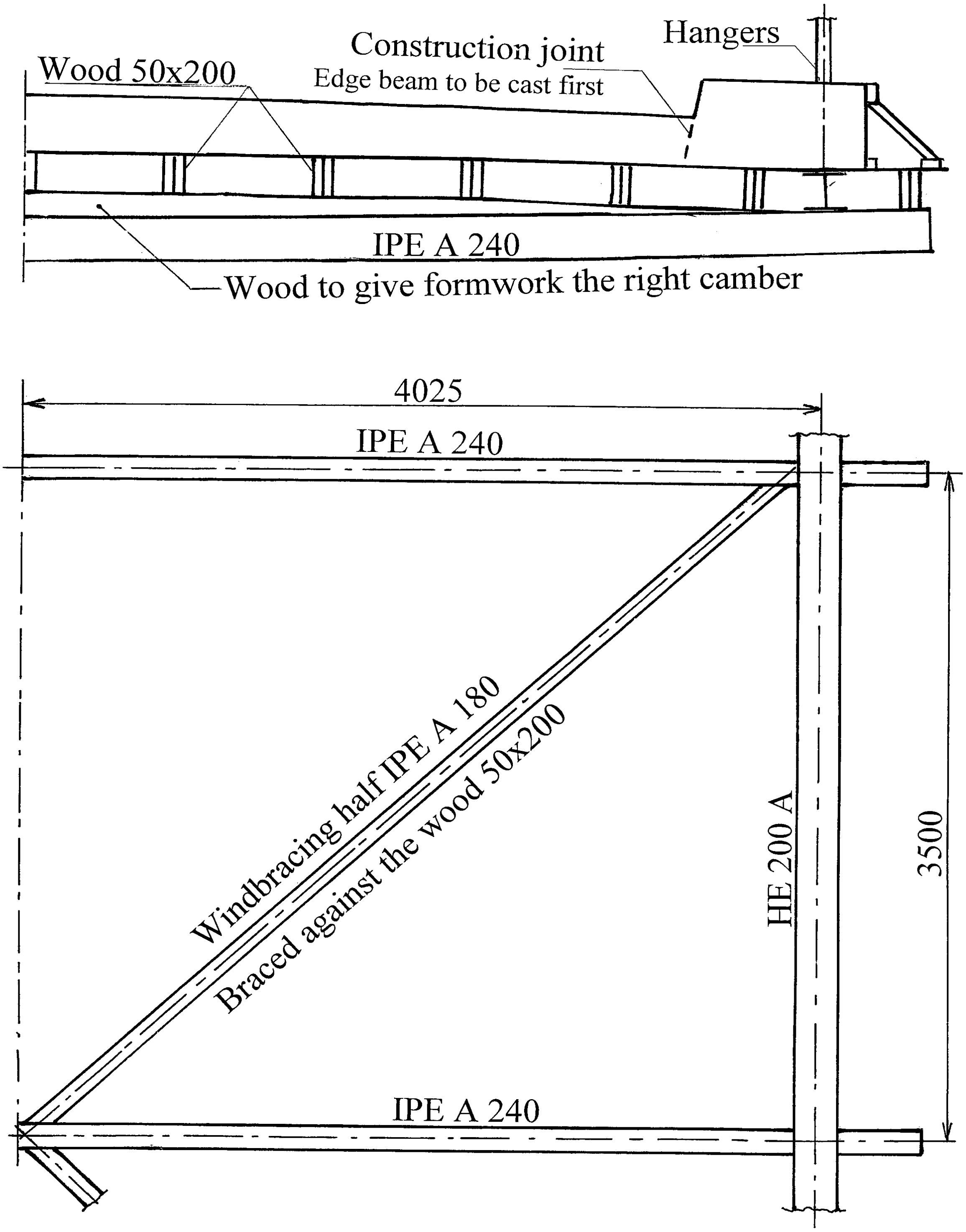

Fig. 56. Half tie and temporary lower chord for the Skodje Bridge on pp. 20 and 50

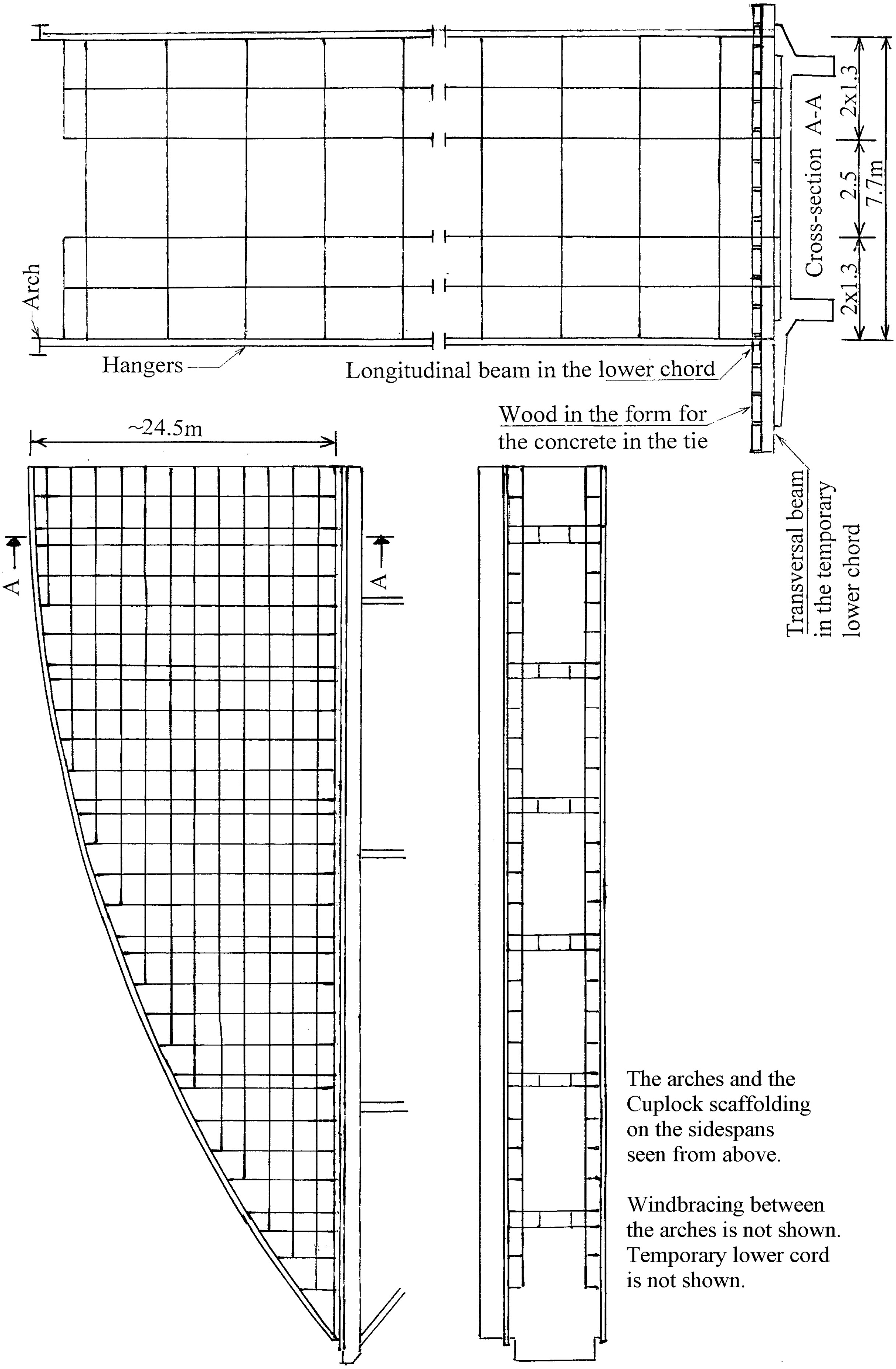

The arches and the Cuplock scaffolding on the sidespans seen from above.

Windbracing between the arches is not shown. Temporary lower cord is not shown.

Fig. 57. Scaffolding for the erection of a steel skeleton on a side-span of the Skodje Bridge, p. 20 and 50a to 50b.

A simpler and better way of erecting a network arch was used for the Mangamahu Bridge in New Zealand. See the author's home page http://home.uia.no/pert under the button "Systematic thesis" on page H-9. See also how the arch of the Brandanger Bridge was erected. p. 94a

REMOVING THE TEMPORARY LOWER CHORD OF THE SKODJE BRIDGE

The temporary lower chord of the proposed Skodje Bridge is shown in fig. 56 on p. 50b. Fig. 57 on p. 51 shows the scaffolding for the erection of the steel skeleton for the Skodje Bridge on the approach. Fig. 22 on p. 12 shows how the lower end of a hanger can be fastened to the temporary lower chord. The purpose of the rest of this chapter is to present a simple method of removing the formwork of the lower chord. This method can be compared to other methods of removing the formwork.

It deserves a mention that during his lecture tours the author has often encountered the opinion that making the temporary lower chord a permanent part of the tie might save work. The advantages of the temporary lower chord are explained in great detail on p. 30a.

Before the step by step explanation of the removal of the temporary lower cord and the formwork, a short summary will be presented:

At the start 4 columns over 3 metres long are fastened to the ends of two extra long transversal beams in the temporary lower chord. See fig. 59. Then the connections at the ends of the longitudinal beams above the extra long transversal beams are removed. The screws between these longitudinal beams and the lower ends of the hangers must also be removed.

Now the two extra long beams are forced down till the wheels at the top of the columns at their ends are resting on the edges of the concrete tie. See fig. 59. Over 5 metres of the longitudinal beams and the wooden form above them follow the long transversal beams down. This makes a wooden platform that is used when removing the temporary lower chord. By being rolled on the wheels as seen in fig. 59, the platform can be moved along the edges of the concrete slab. The platform must have a solid wooden fence.

<u>Steps in removing the formwork and temporary lower chord after the lower chord has been cast.</u>

1. The wooden formwork at the edge of the concrete slab is removed around two extra long transversal beams in the temporary lower chord. These beams are in the middle of the span. Here the shear force due to wind during the casting of the concrete tie can be so small that it can be taken in the plywood of the formwork.

2. The extra long transversal beams will carry over 5 metres of the temporary lower chord and its formwork. This formwork above the extra long transversal beams will be part of the platform for removing the rest of the lower chord.

3. The longer transversal beams are about 2.5 metres longer than ordinary transverse beams in the lower chord. Ordinary longitudinal wooden beams, 50x200 mm^2, see fig. 58, rest on the transverse beam. The formwork on top of the wooden beams is mostly plywood plates 14x500x1500 mm^3.

4. Fig. 59 shows part of a cross-section of the wagon for removing the temporary lower chord.

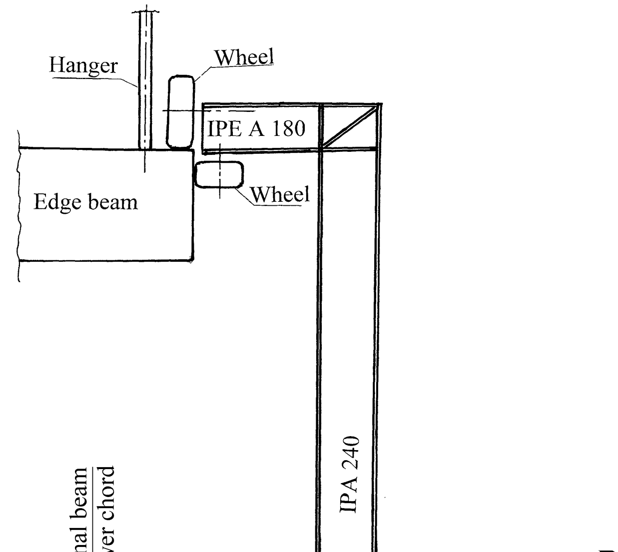

Fig. 59. Wagon for removing formwork and temporary lower chord

5. Four columns over 3 metres long are fastened to the extra long transversal beams. At the top of the columns there are wheels that roll at the edge of the concrete slab. See fig. 59 on the previous page. These columns support the platform for removing the temporary lower chord.

6. Before the platform can be lowered, someone in a basket at the end of a movable arm must go down under the concrete slab and remove the screws at the ends of the longitudinal steel beams just above the two long transversal beams. Screws between the hangers and the longitudinal steel beams in the platform must also be removed. See fig. 22 on p. 12. The removal of screws can also be done from a wagon travelling on the lower flanges of the long transversal steel beams.

7. When the screws mentioned in step 6 have been removed, the two extra long transverse wooden beams can be lowered. To make sure that the longitudinal beams with the wooden plates of the formwork above follow the transversal beams down, the wooden plates in the formwork must be well greased or there must be a plastic film on top of the wooden plates in the formwork.

8. In the platform for removing the temporary lower chord there must be many nails between the plywood plates and the longitudinal wooden beams. There must also be many nails in a piece of wood on top of the transverse steel beams that gives the concrete slab the right camber. This piece of wood must be securely fastened because it has to take up some of the bending moment in the transverse beams.

9. Fig. 60 shows joints in the longitudinal wooden beams. These joints allow the plywood and the wooden beams, to which it is fastened, to move down with the rest of the platform.

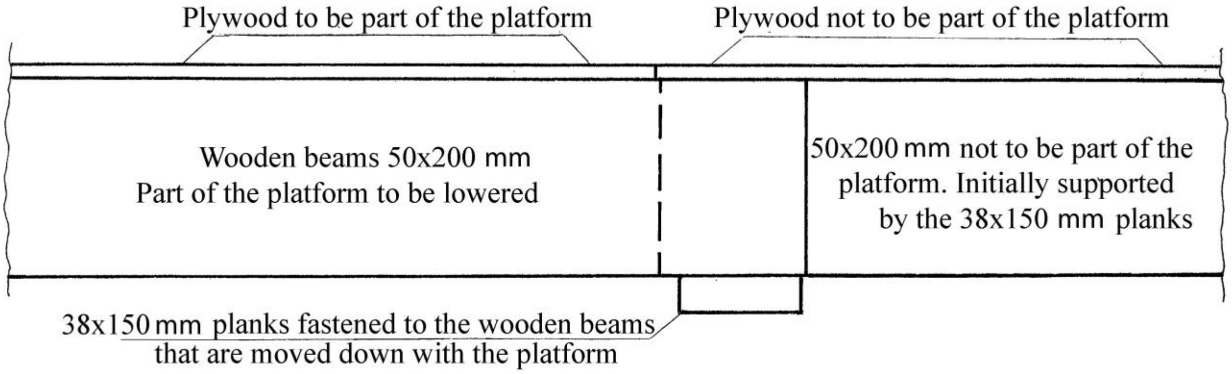

Fig. 60. Joint in wooden beam that lets the platform for removing the temporary chord be lowered

10. The platform for removing the lower chord is lowered so that the wheels at the top of the columns roll on the edge of the concrete slab. See fig. 59 on the previous page.

11. Next to the columns are ladders to facilitate access to the platform after it has been lowered.

12. Before the removal of the rest of the temporary lower cord, a solid railing must be put up around the platform that has been lowered. At both ends of the platform this railing reaches almost up to the temporary lower chord to give the workers protection from beams and formwork torn loose from the temporary lower chord. See fig. 61 on the next page.

13. Jacks fastened to the lower ends of the hangers above the lane can move the platform. No personnel are allowed on the platform when it is moved.

14. Now to the actual removal of the temporary lower chord:

15. Members of the windbracing weigh 30 kg. Their screws in the transverse beams are removed. Then the members are removed by hand.

16. The temporary transverse steel beams with the wood that gives camber weigh around 300 kg. When the transverse beams are loosened from the longitudinal steel beams and the windbracing, they can be removed.

17. The temporary transverse steel beams have holes in the ends for fastening a rope so they can swing out to the edge of the bridge. Later they are lifted onto the bridge deck and taken away by trucks.

18. The longitudinal steel beams in the temporary lower chords can be made up of beams that weigh up to 400 kg. When their longitudinal joints are undone and the longitudinal beams are loosened from the lower end of the hangers, ropes are fastened to their ends.

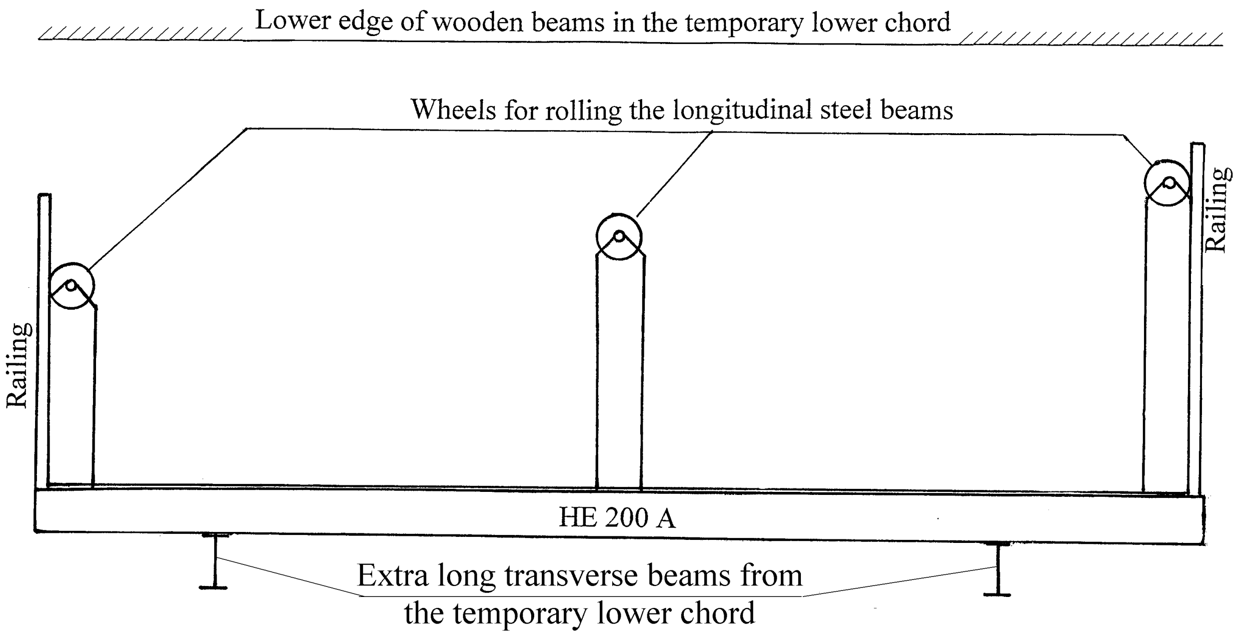

Fig. 61. Longitudinal cross-section of the platform for removal of the temporary lower chord

19. The longitudinal steel beams roll across the platform on wheels on columns on the platform. See fig. 61. After they glide off the platform, they hang suspended at the edge of the bridge till they are lifted and loaded onto trucks.

20. The wood above the transverse beams is loosened by hand and brought to the outer edge of the platform and lifted onto the roadway. The longitudinal wooden beams weigh around 25 kilograms each.

21. Before the platform for removing the lower chord is taken away, the holes for the screws at the lower end of the hangers will be filled with putty and scratches in the corrosion protection must be repaired.

ERECTION OF NETWORK ARCHES IN COSTAL AREAS AND WIDE RIVERS

In coastal areas network arches can be lifted in place by big cranes. See also p. 29k.

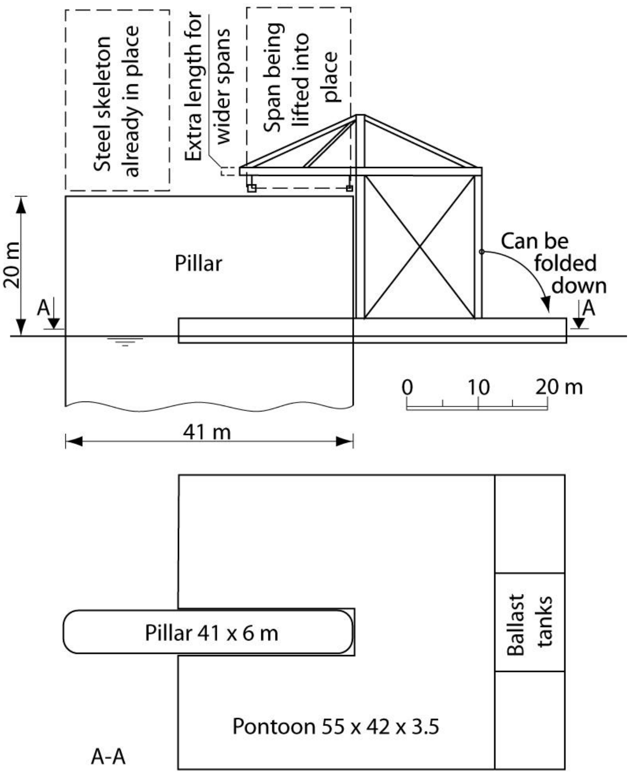

Fig. 61a. Crane for erection of optimal network arches in wide rivers

The crane shown in fig. 61a can be built to erect network arches in wide rivers. It can bring steel skeletons from the shore to the pillars. The crane can be folded down so that it can pass under existing bridges. It needs less than 1 m of water under the pontoon.

The crane in fig. 61a is shown erecting one half of the steel skeleton for a combined road and rail bridge with spans of 160 m. (Räck 2003). The bridge has four arches. Each of the two steel skeletons shown in fig. 61a weighs ~1000 tons.

When both steel skeletons in fig. 61b are in place, they can be joined together and the concrete tie can be cast. At the top of the pillars there must be room for prestressing the longitudinal cables.

The crane can be used for road bridges that are longer and/or wider because road bridges use less steel than railway bridges. For tall pillars pontoons and cranes on top of the pillars would probably be a better idea.

NIELSEN’S BRIDGES

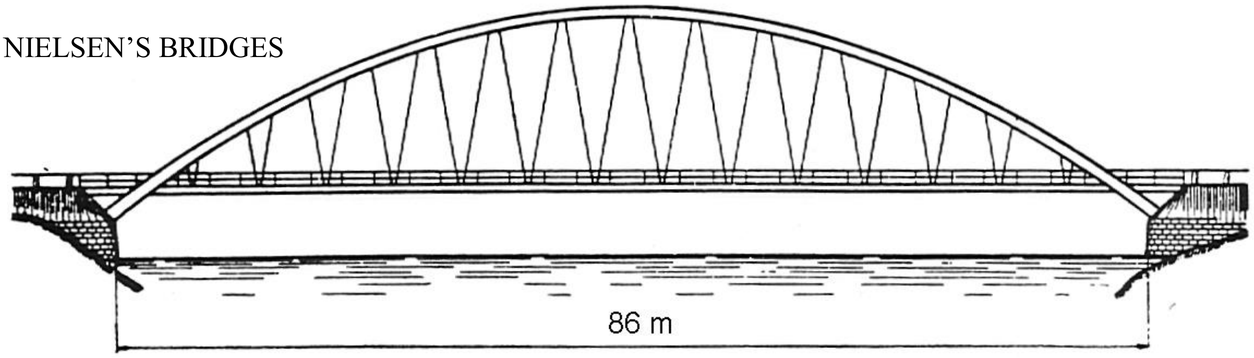

Fig. 61b. Bridge over Øster-Dalelven in Sweden. Design of this bridge started in 1921.

The Nielsen bridges are the forerunners of the network arch. See fig. 61b. They were developed by Octavius F. Nielsen who worked for a Swedish subsidiary of Christiani & Nielsen in Copenhagen. Around 60 of these bridges were built in Sweden between the two World Wars. (Ostenfeld 1976) p. 219. Four of these bridges were shown in the doctoral thesis of O. F. Nielsen which was handed in in 1929. (Nielsen 1930).

Some of the hangers were meant to relax due to live load on part of the span. The slope of the hangers made the bending moments in the arches almost negligible. The hangers were steel rods anchored in the concrete arches and in the middle of the longitudinal concrete beams in the tie. See fig. 61c.

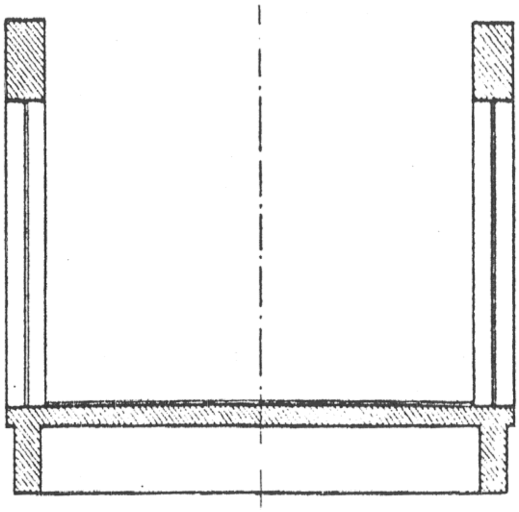

Fig. 61c. Cross-section of a Nielsen Bridge

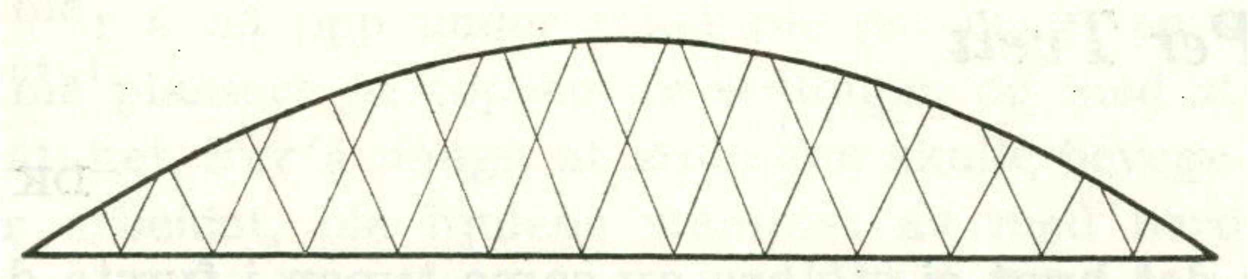

Fig. 61d. Bridge from Nielsen's patent 1926

Over the years vehicle weight and speed have increased, but hangers breaking has not been a problem in Nielsen bridges. How Nielsen's bridges were calculated is explained at length in his doctoral thesis. (Nielsen 1930). The calculations were simpler when all hangers had the same slope and the bridge probably looked better. In the Nielsen bridges that were built there were no hangers that crossed each other. It was probably not found to be necessary, but in the patent from 1926 some hangers crossed each other. See fig. 61d.

After hangers relax, the bending in chords increase faster. In Sweden the relaxing hangers have been very durable. (See p. 22).

In his master's thesis, (Tveit 1955), the author found that slimmer chords, stronger materials and bigger loads make it advantageous to let some hangers cross each other at least twice. In Japan bridges like the one in fig. 27 on p. 17 are called Nilsen-Lohse Bridges. The author would be inclined to call them network arches, but he does not think that they are optimal.

A famous German professor, Beyer 1933, wrote that he could not understand why Nielsen had stopped halfway and not let the hangers meet at the arch. There was a point that he failed to see. See p. 8.

Fig. 61e. The Castelmoron Bridge built in France in 1933

The longest Nielsen bridge was built in France in 1933. See fig. 61e. It had a span of 145 m.

TROUBLE WITH LOWER END OF HANGERS COMING OUT OF THE CONCRETE TIES.

Bridge authorities in Sweden are reluctant to accept lower ends of hangers that come directly out of the concrete like in figs 6, 6a, 6c, on pp. 6 and 6a, and on fig. 43 on p. 41a. These lower ends of hangers are difficult to maintain and can not be changed. The main trouble is corrosion just above the concrete. The cement prevents corrosion in the concrete. The prestress in the ties of optimal network arches makes the lower end of the hanger less likely to corrode. Often salt is used in the winter to remove snow. When the snow melts a layer of salt is left on the steel just above the concrete tie. This encourages corrosion.

Careful maintenance can counteract the problem. There has not been a problem with the Steinkjer Bridge. Maybe the level on the concrete was 5 to 10 mm higher around the lower end of the hangers. The situation on the Bolstadstraumen Bridge can be seen in figs 61g and 61h. When the picture was taken the bridge was 45 years old. The decisive cross-section in the rods is under the nuts. Just above the concrete there might be corrosion, but here the stress is small. The author would have liked to have the corrosion protection just above the concrete renewed right away.

Olav Grindland of the Bridge Department of the public roads in Norway suggests that corrosion protection of the rods at the lower end of hangers should be applied down to 10 cm into the concrete before the rods are built in.

What can be done to avoid irreparable damage at the end of hangers? There are two groups of remedies. 1. Extra careful corrosion protection of the steel just above the concrete. 2. Avoiding fastening the lower end of hangers directly to the concrete.

1. A. More frequent maintenance of the corrosion coating that is used on all the steel.
1. B. Extra durable corrosion coating just above the concrete. For instance: A plastic coating that also covers the concrete nearest to the steel rod.

2. A. Fastening the lower end of the hangers to rods through the tie as suggested for the Brandanger Bridge on p. 94 by Einar Noremark of the Norwegian Public Road Administration. See fig. 61f.

2. B. Fastening the lower end of the hangers to steel plates under the tie. This would increase the area of steel that can not be replaced and will have to be given good corrosion protection.

The Nielsen Bridges on the previous page have lower ends of hangers that come directly out of the concrete. Wondering how the lower end of these hangers had been doing, the author asked the Swedish bridge office in Borlänge. They answered that they had had trouble with nearly half the hangers that came directly out of the concrete and were keen to avoid such designs. The author still prefers hangers that come directly out of the concrete.

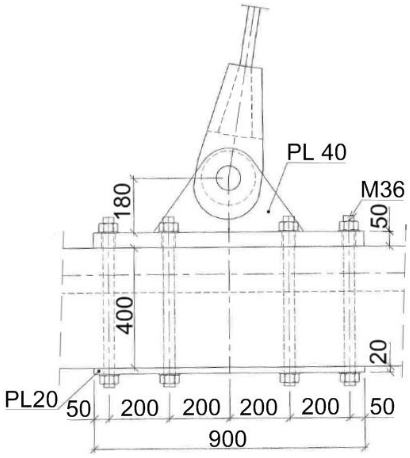

Fig. 61f. Lower ends of hangers

Fig. 61g and fig. 61h. Lower ends of hangers coming out of concrete in the Bolstadstraumen Bridge

The influence lines and other information on network arches calculated by the author serve two main purposes. One is to give readers a chance to check the author's statements on network arches. The other is to help engineers who want to design network arches choose suitable dimensions.

The bending in the chords is strongly influenced by the stiffness of the chords. The bending in the lower chord influences the moderate longitudinal reinforcement. There is little bending in the arches. Thus exact information on bending in the chords is not important. It is much more important to know the hangers' tendencies to become relaxed. Therefore this chapter provide information that can be of help when searching for skeleton lines that lead to acceptable tendencies for the relaxation of hangers. A sensible constant angle between arch and hangers is a good choice. Schanack and Brunn 2009a.

When transferring values from one span to another, general model laws apply. See for instance Maier-Leibnitz 1941. Here values of the span to be calculated are in parentheses. n is the ratio between the lengths of the calculated span and the span to be calculated. m is a factor that can be chosen freely. It indicates dimensions perpendicular to the plane of the arch. To get to the new span (a model) from the span that has been calculated the following equations can be used:

Length (L) $= L/n$ Cross-section (A) $= A \cdot E/n^2 \cdot m \cdot (E)$

Stiffness (I) $= IE/n^4 \cdot m \cdot (E)$ Nodal load (P) $= P/n^2\, m$

Bending moment (M) $= M/n^3\, m$ Deflection (f) $= f/n$

In the winter when the days are short, one only needs to remember that the ordinates of the influence lines for axial forces are independent of the span. Ordinates of the influence lines for bending moments are proportional to the length of the span.

The dimensions of the lower chords in the Steinkjer Bridge can be found in fig. 6a on p. 6.

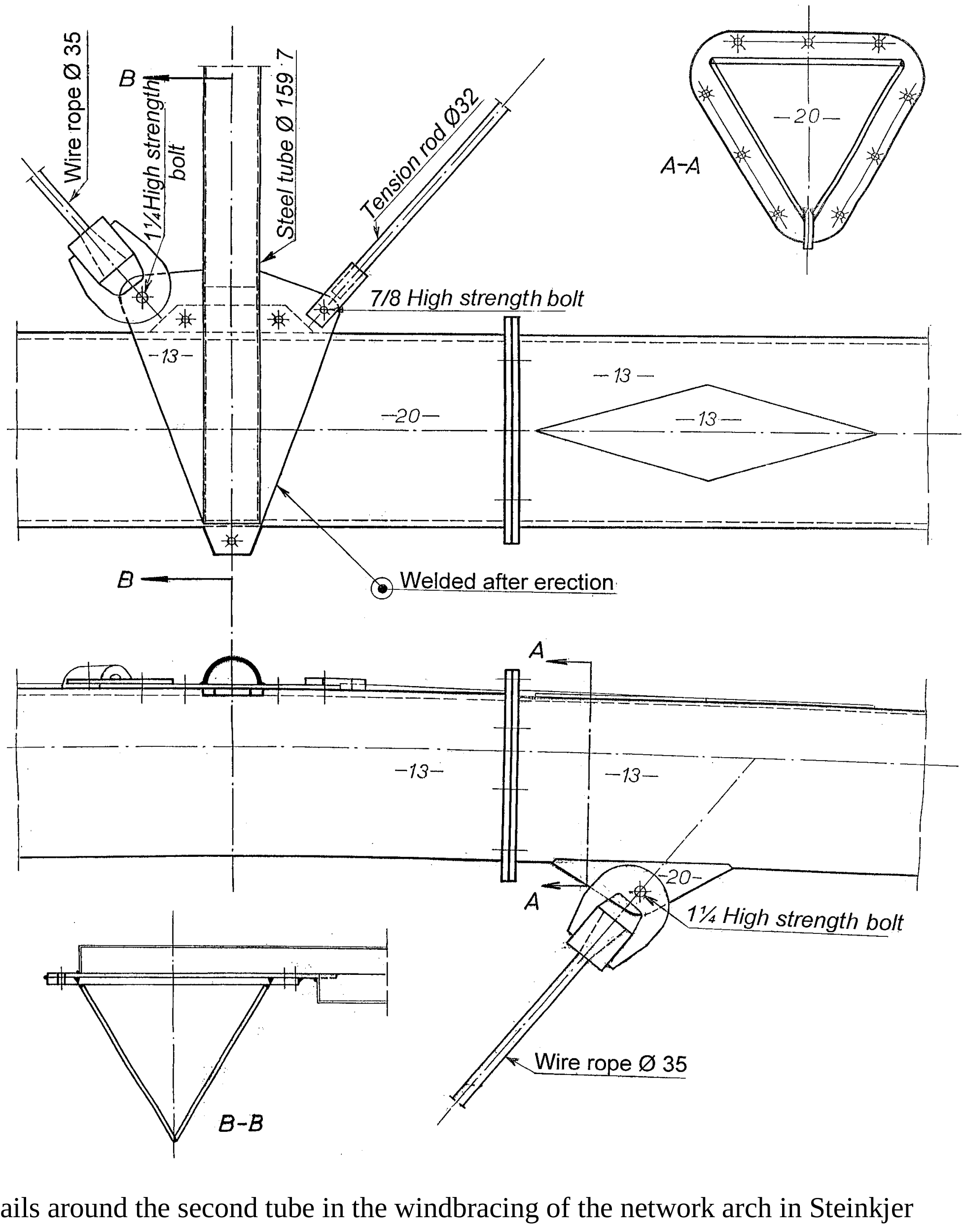

Fig. 62. Structural details around the second tube in the windbracing of the network arch in Steinkjer

INFLUENCE LINES FOR NETWORK ARCH AT STEINKJER

Cross-sections for half bridge:
Lane: $F = 110\ \text{dm}^2$ $I = 180\ \text{dm}^4$ $E = 280\ \text{t/cm}^2$
Arch: 9-9 $F = 2.2\ \text{dm}^2$ $I = 6\ \text{dm}^4$
5-9 $F = 2.6\ \text{dm}^2$ $I = 7\ \text{dm}^4$ $E = 2150\ \text{t/cm}^2$
0-5 $F = 3.5\ \text{dm}^2$ $I = 10\ \text{dm}^4$
Hangers: $F = 6.15\ \text{dm}^2$ $E = 1800\ \text{t/cm}^2$

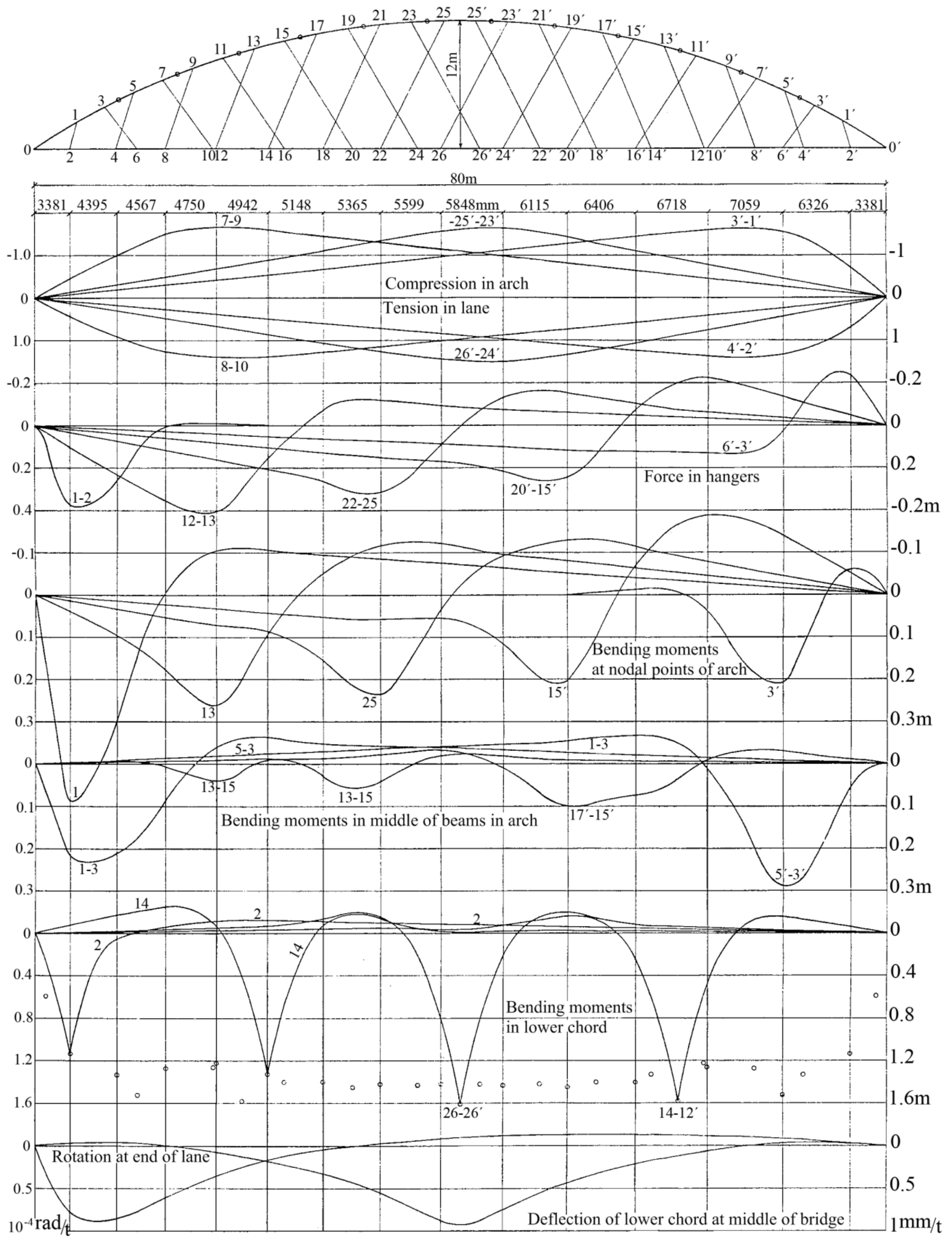

Fig. 63. Typical influence lines for the bridge at Steinkjer. The difference in slope between two adjoining hangers is 1.8°. The slope of the steepest hanger is 74.4°.

INFLUENCE LINES FOR NETWORK ARCH OVER BOLSTADSTRAUMEN

Cross-sections for half bridge:
Lane: $F = 120\ \mathrm{dm}^2$ $I = 130\ \mathrm{dm}^4$ $E = 280\ \mathrm{t/cm}^2$
Arch: 9-9 $F = 2.11\ \mathrm{dm}^2$ $I = 5.19\ \mathrm{dm}^4$
5-9 $F = 2.46\ \mathrm{dm}^2$ $I = 5.0\ \mathrm{dm}^4$ $E = 2150\ \mathrm{t/cm}^2$
0-5 $F = 3.13\ \mathrm{dm}^2$ $I = 8.0\ \mathrm{dm}^4$
Hangers: $F = 5.4\ \mathrm{dm}^2$ $E = 1800\ \mathrm{t/cm}^2$

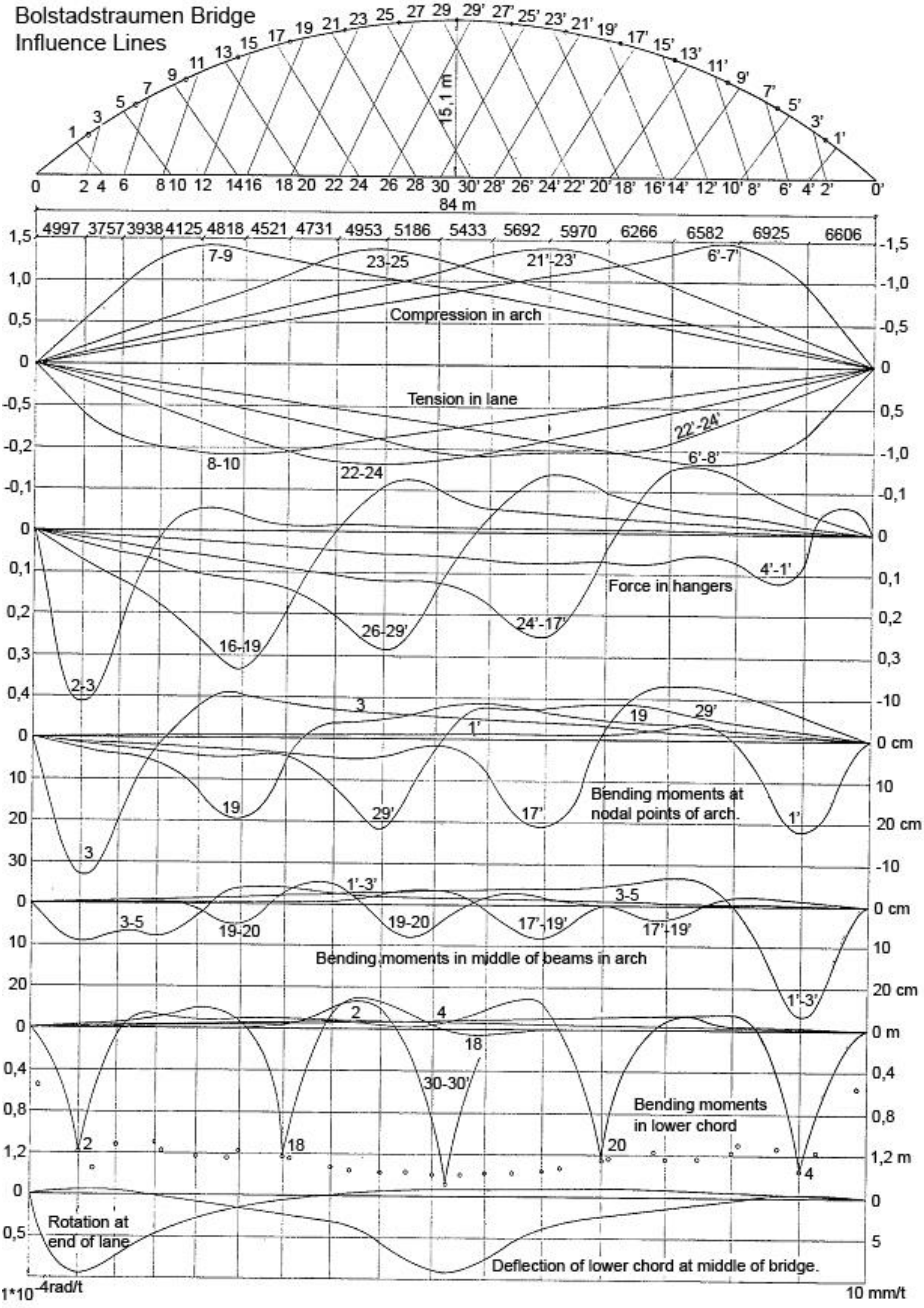

Fig. 64. Typical influence lines for the bridge over Bolstadstraumen. The difference in slope between two adjoining hangers is 1.7°. The slope of the steepest hanger is 73.8°.

VIENNA 1980

Two network arches both spanning 200 metres were calculated for the IABSE congress in Vienna in 1980. See fig. 8 p. 8. Tveit 1980a and 1980b. For the calculation of these network arches an optimisation program called FEMOPT was used. Mr. Georg Andersen designed it in partial fulfilment of his Dr.-Ing. degree, Andersen 1979.

The design called 200A, see pp. 60 to 68, has steeper hangers than the design called 200B. Pp. 69 to 72 give information on the dimensions and geometry of 200B. 200A and 200B have nearly the same cross-sections. From the influence lines on p. 60 and p. 72 it can be seen that the steeper hangers in 200A give smaller bending moments, but less resistance to relaxation of the hangers.

The skeleton lines for 200B have the same shape as the skeleton lines for the network arch for the Åkvik Sound. The difference is a factor 135/200, which is the ratio of the spans. The good thing about the skeleton lines presented in this publication is that they give very even maximum stress in the hangers. This is to some extent load dependent, but for spans between 150 and 200 metres little can probably be gained by examining other skeleton lines.

Most of the symbols in the diagrams will be immediately understandable to an experienced structural engineer. The stress index in fig. 71 on p. 66 might be an exception. It is the stress in the member found by Navier’s formula divided by the nominal yield stress. In fig. 71 the result is multiplied by 1000. The stress index is calculated in five places in the member. The highest stress index has been given as output.

The bending moment diagram in fig. 71 on p. 66 has thick and thin lines. The thin lines are the result of the first calculation which is a standard linear-elastic calculation, carried out assuming that hangers take compression etc. The thick line is calculated by non-linear methods assuming sagging hangers etc. When the difference between two lines is small, only the thick line has been drawn.

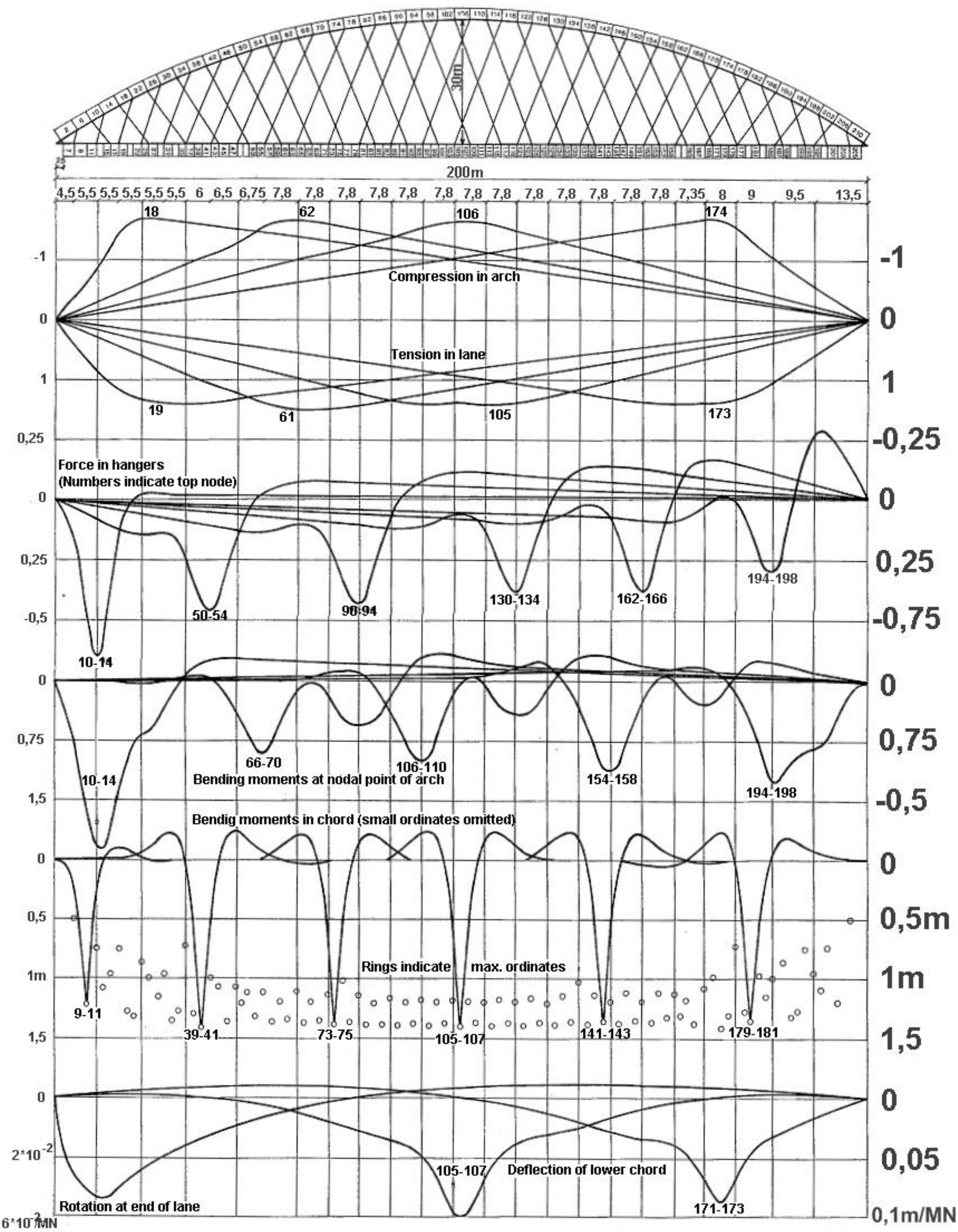

Fig. 65. Influence lines for the network arch 200A spanning 200 m. Designed for the IABSE Congress in Vienna 1980. Tveit 1980a.

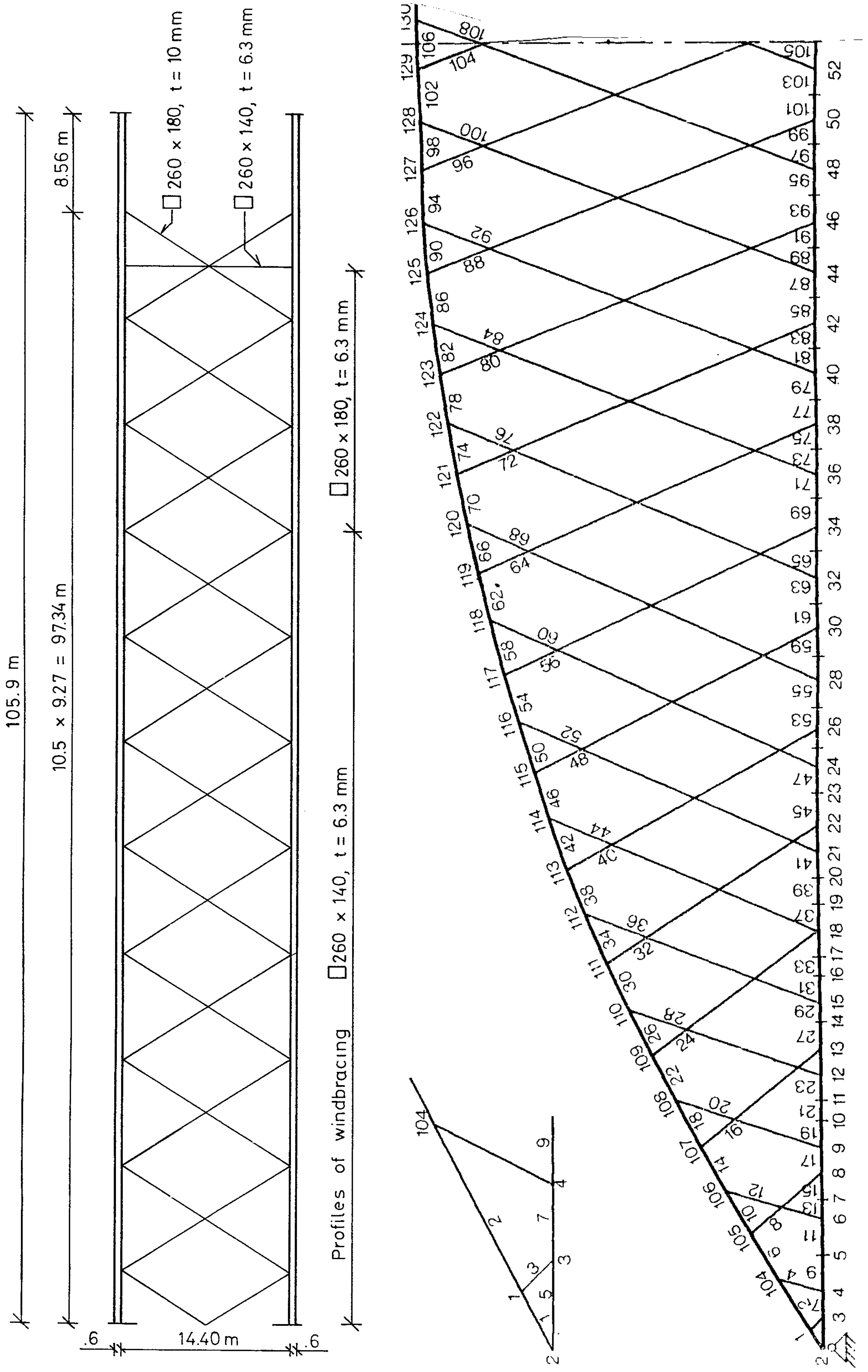

Fig. 66. Windbracing and skeleton lines of 200A

Coordinates of the arch

Node	x	y
1	-98.70	.8490
104	-94.56	3.453
105	-91.20	5.447
106	-87.81	7.368
107	-84.38	9.217
108	-80.90	10.99
109	-77.39	12.69
110	-73.85	14.31
111	-70.27	15.86
112	-66.66	17.33
113	-63.01	18.72
114	-59.34	20.04
115	-55.64	21.27
116	-51.92	22.42
117	-48.17	23.50
118	-44.40	24.49
119	-40.60	25.40
120	-36.79	26.24
121	-32.97	26.98
122	-29.12	27.65
123	-25.27	28.23
124	-21.40	28.74
125	-17.52	29.15
126	-13.64	29.49
127	-9.745	29.74
128	-5.849	29.91
129	-1.950	29.99

Coordinates of the lane

Node	x	y
2	-100.0	0.
3	-97.50	0.
4	-95.50	0.
5	-92.50	0.
6	-90.00	0.
7	-88.50	0.
8	-86.50	0.
9	-84.50	0.
10	-82.50	0.
11	-81.00	0.
12	-79.00	0.
13	-77.00	0.
14	-75.00	0.
15	-73.50	0.
16	-71.50	0.
17	-70.00	0.
18	-68.00	0.
19	-66.00	0.
20	-64.00	0.
21	-62.00	0.
22	-60.00	0.
23	-57.50	0.
24	-55.50	0.
25	-54.00	0.
26	-52.65	0.
27	-50.70	0.
28	-48.75	0.
29	-46.80	0.
30	-44.85	0.
31	-42.90	0.
32	-40.95	0.
33	-39.00	0.
34	-37.05	0.
35	-35.10	0.
36	-33.15	0.
37	-31.20	0.
38	-29.25	0.
39	-27.30	0.
40	-25.35	0.
41	-23.40	0.
42	-21.45	0.
43	-19.50	0.
44	-17.55	0.
45	-15.60	0.
46	-13.65	0.
47	-11.70	0.
48	-9.750	0.
49	-7.800	0.
50	-5.850	0.
51	-3.900	0.
52	-1.950	0.

Fig. 67. Co-ordinates for 200A

Cross - sections used in computations

	A	γ	I	W	E ***	Thickness of top and bottom plate of arch in mm.	
	m^2	MN/m^3	m^4	m^3	MN/m^2		
All hangers	.0015	.08	.0	.0	168000		
Arch, node 2 to 104	.1118	.09	.0366	.519	210000	55	Member 1 and 2
" " 104 to 107	.0998	.09	.0307	.0441	"	45	" 6 to 14
" " 107 to 114	.0962	.09	.0289	.0418	"	42	" 18 to 42
" " 114 to 118	.0938	.09	.0278	.0403	"	40	" 46 to 58
Member 3 and arch above node 118	.0914	.09 **	.0267	.0388	"	38	" 3 and above 62.
Edge beam	2.274	.03035 *	.018	.06	38000		

The high specific gravity caters for weight of asphalt, guardrails, railings and lower end of hangers

The high specific gravity caters for weight of windbracing and upper end of hangers.

Fig. 68. Cross-sections used in the calculation of 200A

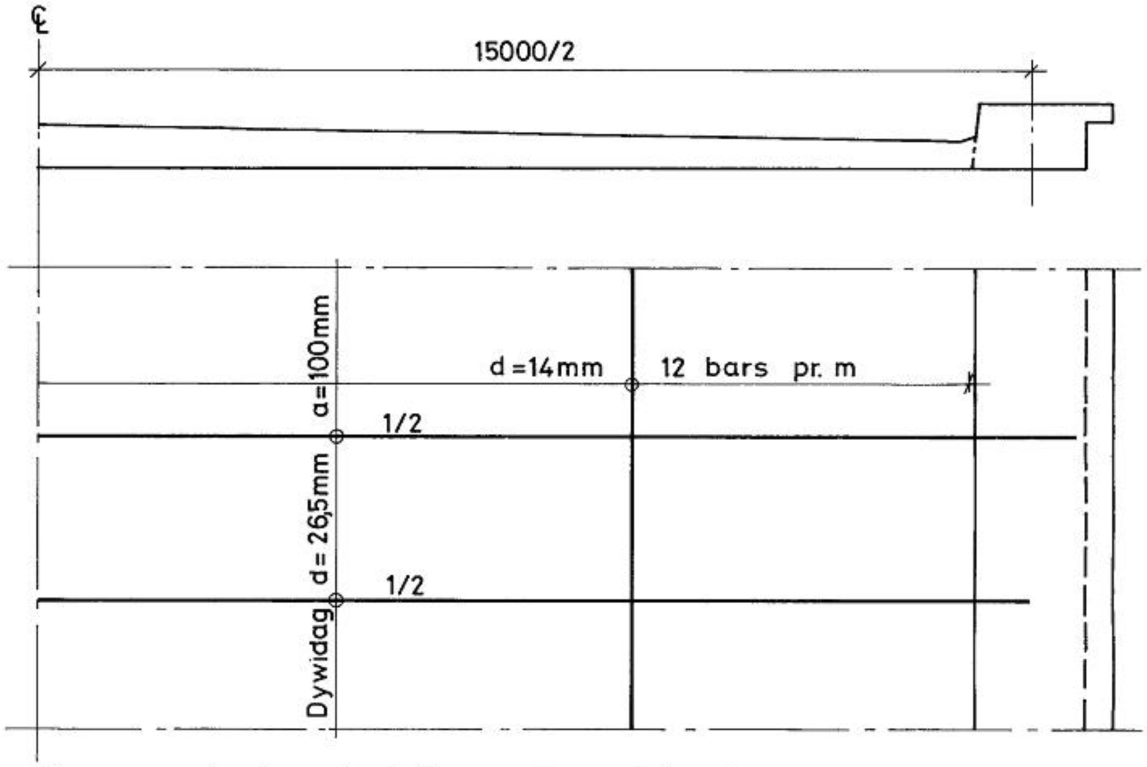

The concrete lane is fully prestressed in the transverse direction and partially prestressed longitudinally.

M = 1:50

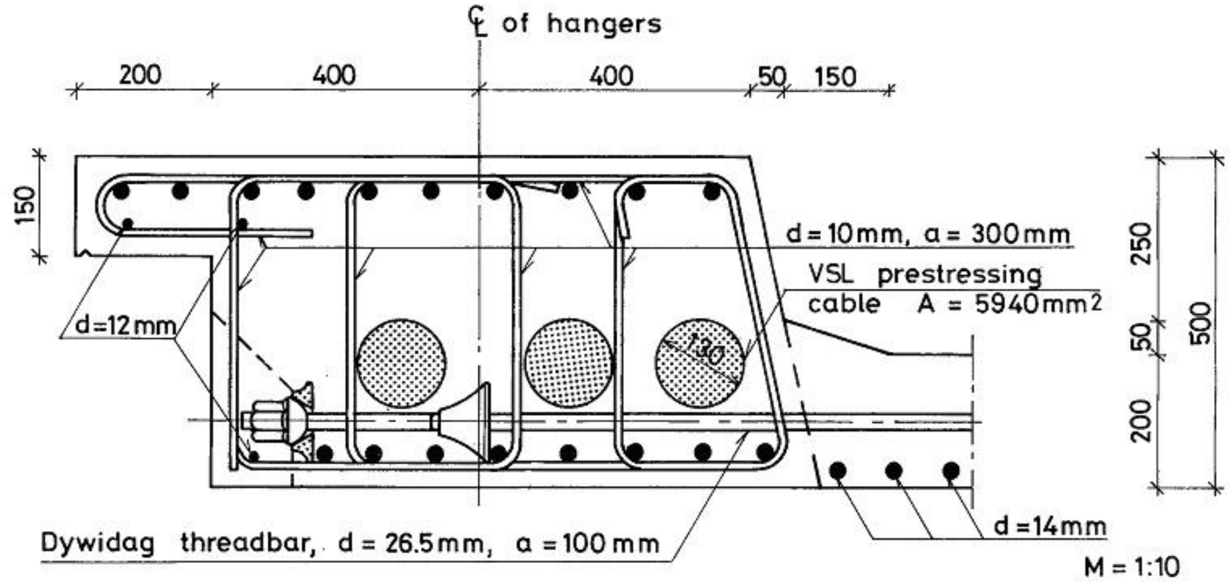

Longitudinal bars have d = 20mm when nothing else is indicated.

Cover is 30mm in the longitudinal edge beam and 20mm in the lane.

Longitudinal prestressing steel: $f_{0.2k} = 1582$ MPa, $f_{ptk} = 1818$ MPa

Transversal prestressing steel: $f_{0.2k} = 1080$ MPa, $f_{ptk} = 1230$ MPa

Ribbed bars: $f_{tk} = 600$ MPa

Concrete cylinder strength: $f_{ck} = 40$ MPa

Reinforcement to resist tensile stresses under anchor plates is not shown.

Fig. 69. Some reinforcement of edge beam and lane for 200A. Tveit 1980a. The thickness of concrete cover outside the reinforcement was smaller 25 years ago.

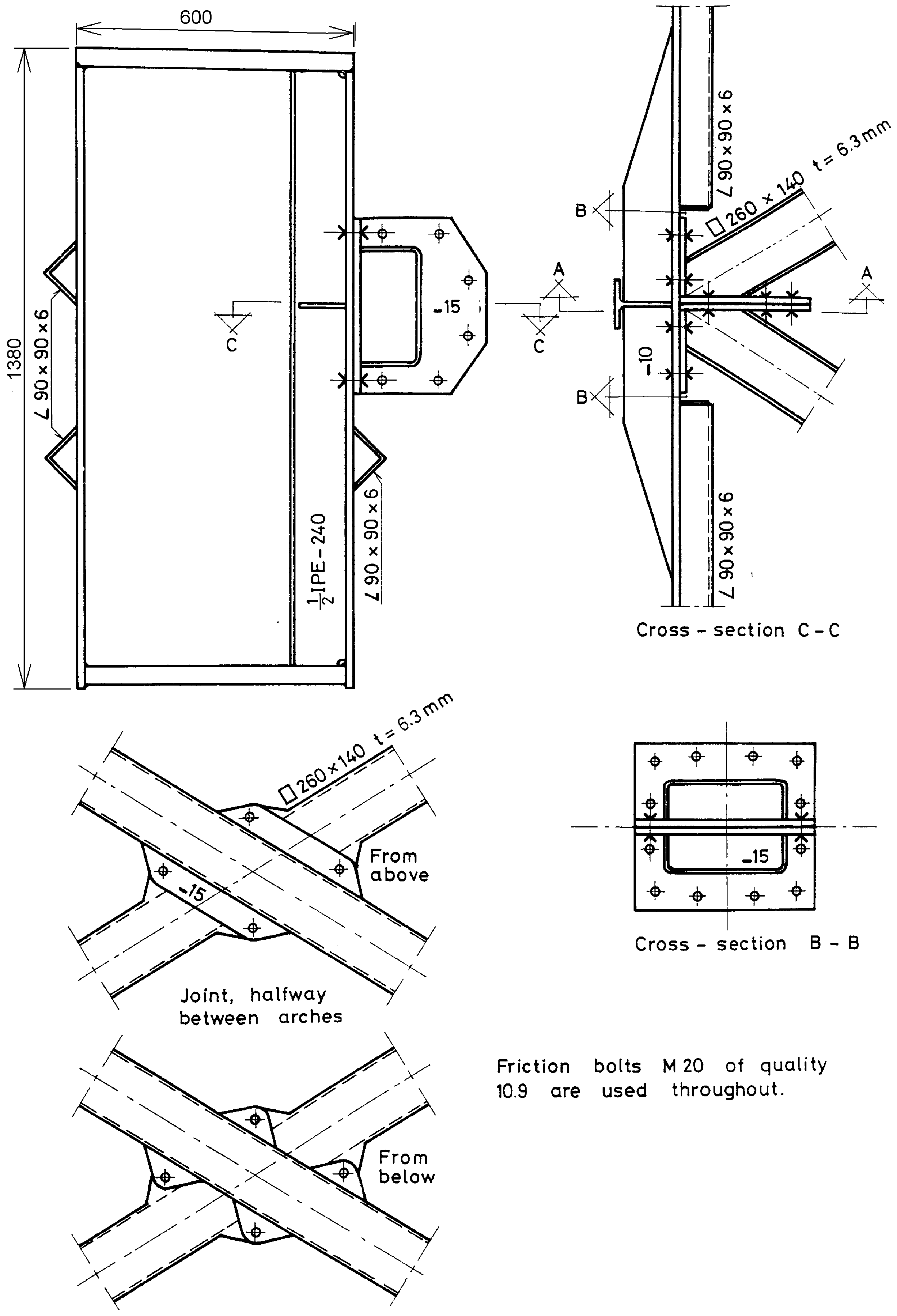

Fig. 70. Details of arch and windbracing in 200A. Tveit 1980a.

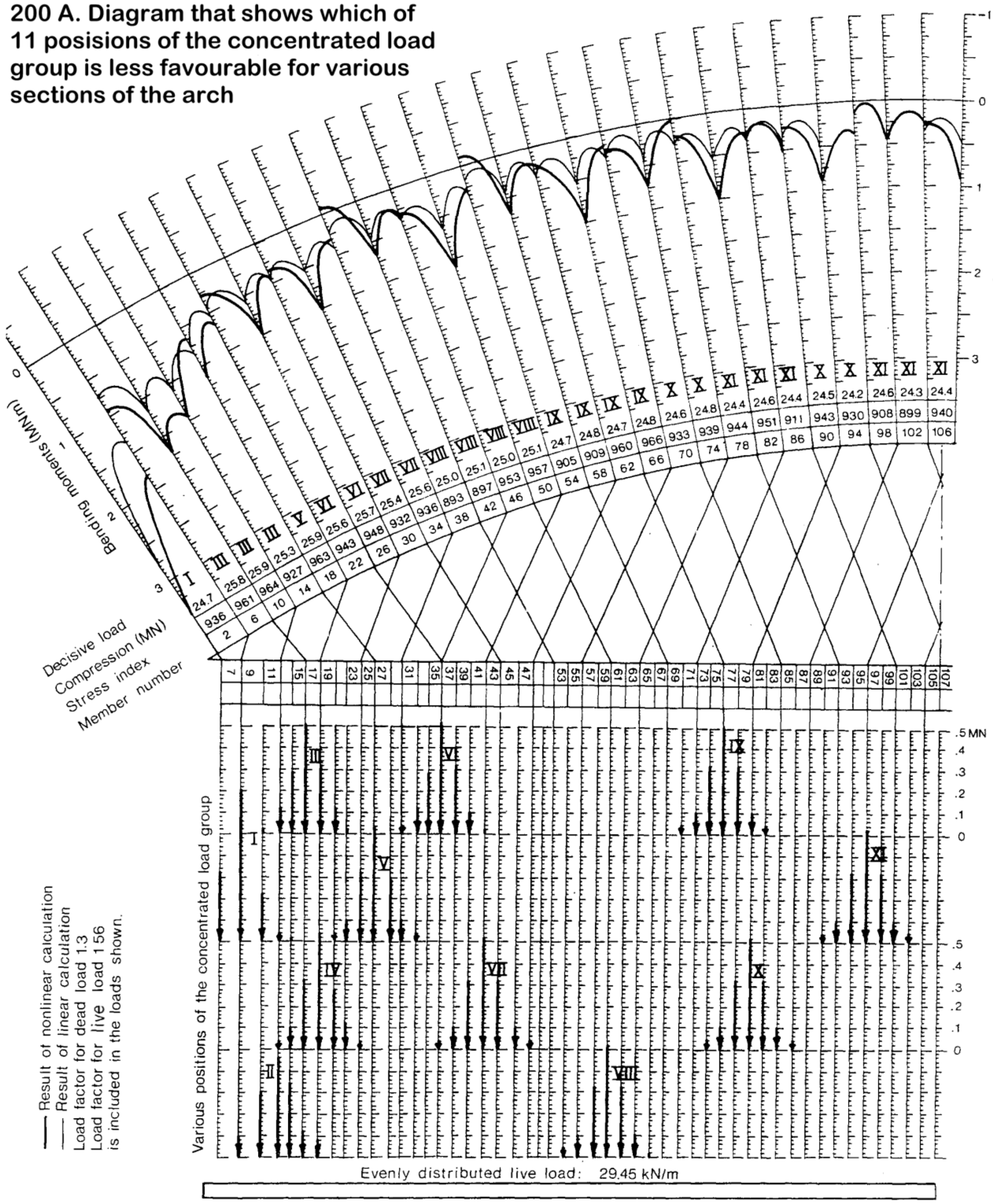

Fig 71. Forces and stress indexes for loads that decide the dimension of the arch of network arch 200A

The diagram shows how non-linear calculations influence the forces in the arch. The definition of the stress index is found on p. 59. The load groups are found in fig. 23 p. 13. The co-ordinates are found in fig. 67. The dimensions of the network arch are found in figs 68 to 70.

Stress in the arch middle of the span due to a bending moment of 1 MNm is 26 N/mm^2.

Network arches with all hangers in tension act as trusses and have little bending in the chords. Hangers can, however, be made to relax by live load on one side of the span. Fig. 72 shows how the network arch called 200A reacts to a very big load on one side of the span. The left 54% of the span carries a live load equal to the dead load on the lane.

The dotted hangers are relaxed due to live load. They are numbered according to the sequence in which they relax. The segments of the chords marked “a” belong to parts of the arch which act like a truss, i.e. where all hangers are in tension.

The segments of the arch marked “b” are attached by hangers in tension to a section of the span acting like a truss.

The chords marked “c” are connected to each other by one set of hangers in tension. This part of the bridge functions a bit like a tied arch with one set of hangers.

The equilibrium of zone “c” is dependent on shear and bending in the chords. Zone “c” can have large bending moments. Zones “a” and “b” are more firmly held in place than zone “c”.

Relaxation of hangers causes significant increase in bending moments in the chords only after a zone “c” exists, and even then bending moments do not increase as fast as the moments in a tied arch with vertical hangers.

This is because the sloping hangers restrain the horizontal displacement of the arch and because parts of the network arch work like a truss.

Even if some hangers relax, moderate live load on part of the span gives smaller maximum stresses in the arch than the same live load on the whole span. This is because the partial live load gives smaller axial force in the arch.

Fig. 73 on the next page shows that only after the relaxation of six hangers does the two load cases lead to the same maximum stress.

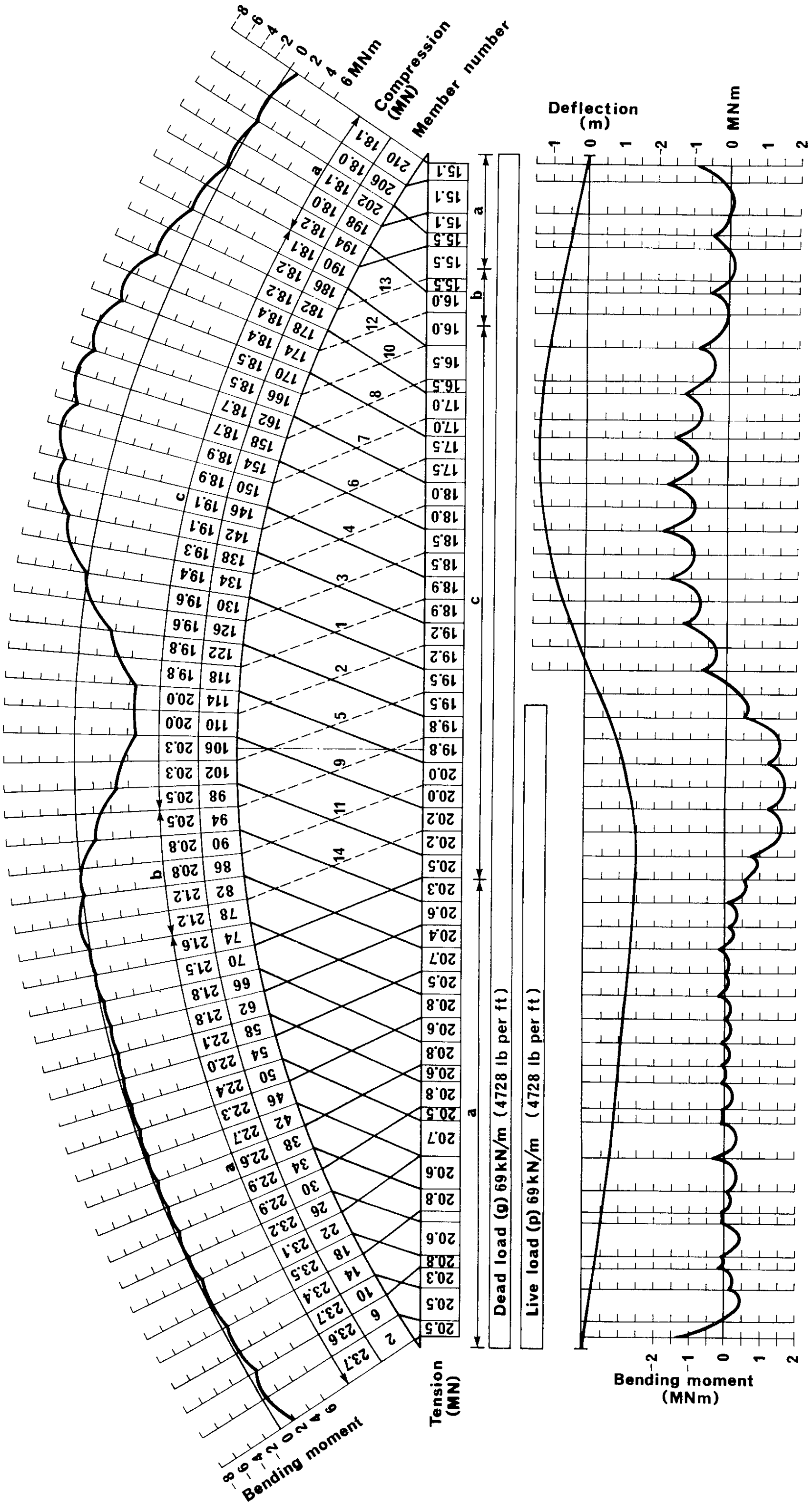

Fig. 72. Forces and deflections due to an extremely skew load on 200A

When only two hangers have relaxed, the whole structure works almost like a truss.

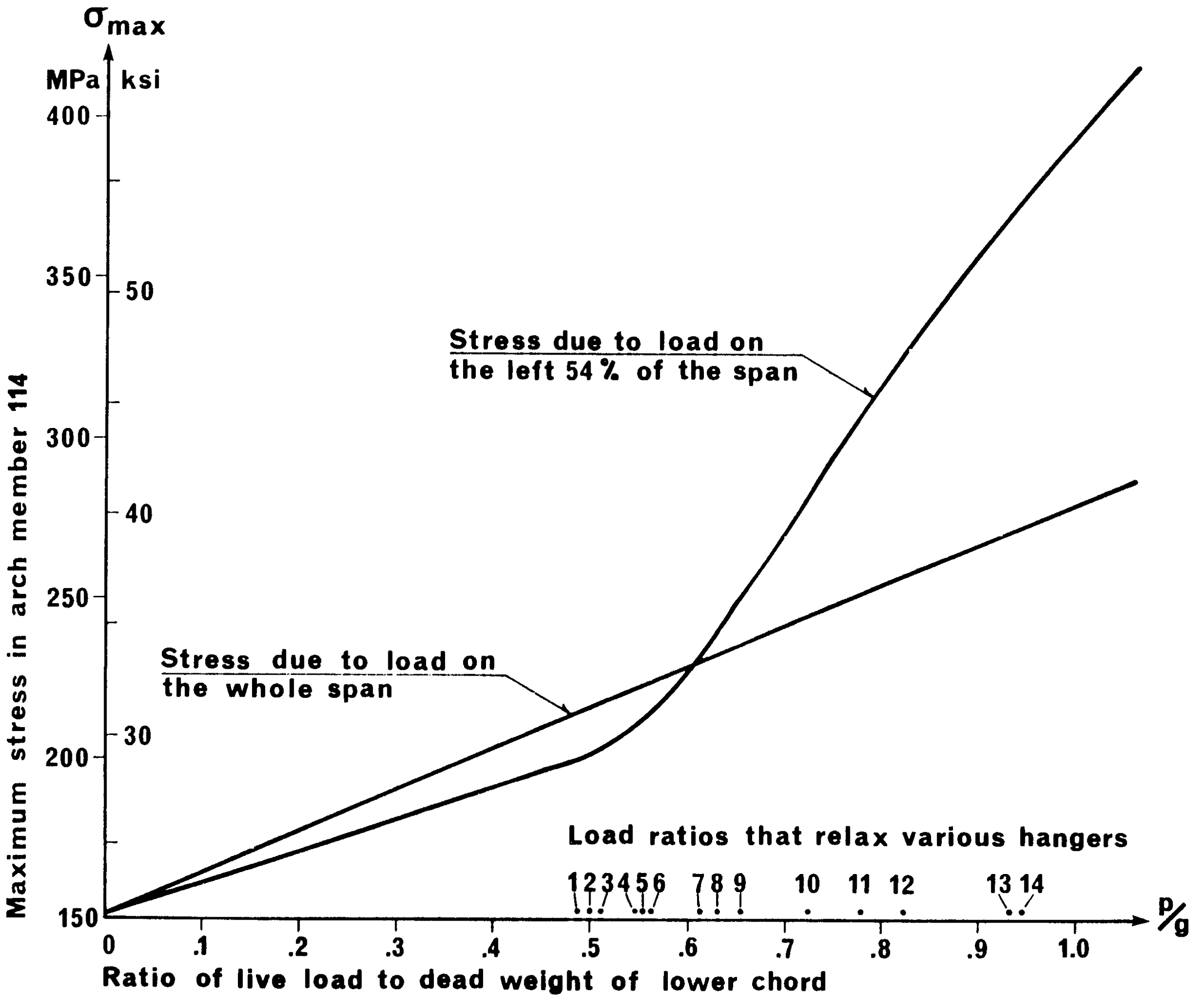

Fig. 73. Development of maximum stress in the arch member numbered 114 in fig.72.

Fig. 73 applies to bridge 200A which has the arch shown in fig. 70. In bridges with more slender chords, i.e. universal columns, the bending moments will increase more abruptly after some hangers have relaxed. This is because slender chords have less ability to take the increased bending moments that occur after some hangers have relaxed.

Fig. 73 shows how maximum stresses in member 114 increase with an increasing, evenly distributed load. The loaded length of 54% of the span and member 114 has been chosen because it is the member that gives equal maximum stress due to partial load and full load for the lowest live load intensity. The curved line shows how stresses increase with increasing load intensity on the left of the span. The straight line shows how stresses increase due to live load on the whole span.

For fig. 73 the span in fig. 72 has been calculated by non-linear calculation in the deflected state assuming constant modulus of elasticity. Still stresses due to partial load are almost linear until the first hanger relaxes. When hangers 1 and 2 have relaxed, the maximum stress in member 114 increases equally fast due to partial load as due to load of equal intensity on the whole span. For a live load of 61% of dead load, partial load and full load give equally high maximum stress in member 114. Hangers 1 to 6 are now relaxed.

Broadly speaking, hangers relax because of horizontal displacement of the arch due to partial live load on the lane. If we give the hangers a smaller angle with the lower chord, their tendency to relax is reduced, and bending due to relaxation is reduced. The smaller angle with the chords will, however, lead to an increase in the bending moments due to concentrated loads. Clearly a compromise must be found.

Pp. 42 to 46 illustrate the effect of relaxation of hangers. Since it is more complicated to calculate spans where hangers relax, it saves considerable time if the hangers have slopes that make it relatively easy to prove that it is the load on the whole span that decides the dimensions of the chords. Look also at the lower 40% of p. 5a. The author is not sure, but he thinks that there should be no relaxation of hangers in serviceability limit state. SLS.

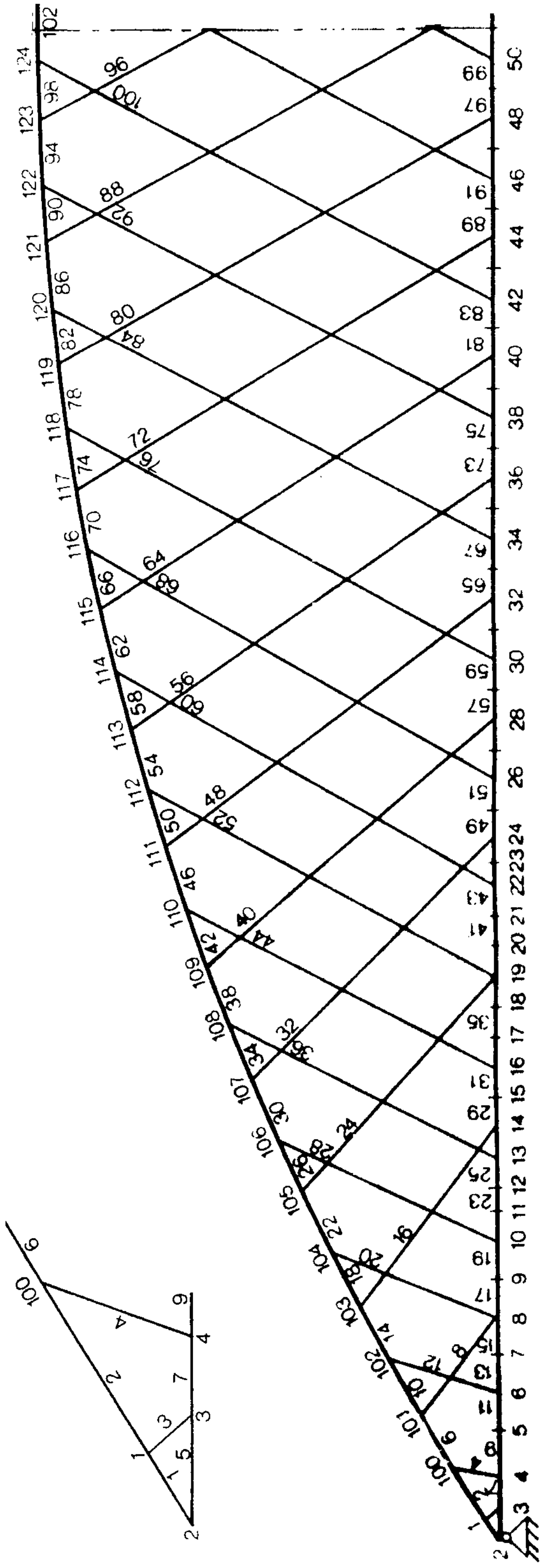

Fig. 74. Skeleton lines for 200B, which is a network arch spanning 200 metres. Tveit 1980a.

Cross - sections used in computations

	A	γ	I	W	E***	Thickness of top and bottom plate of arch in mm.	
	m^2	MN/m^3	m^4	m^3	MN/m^2		
All hangers	.0015	.08	.0	.0	168000		
Arch, node 2 to 100	.1118	.09	.0366	.519	210000	55	Member 1 and 2
" " 100 to 102	.0998	.09	.0307	.0441	"	45	" 6 and 10
" " 102 to 110	.0962	.09	.0289	.0418	"	42	" 14 to 42
" " 110 to 114	.0938	.09	.0278	.0403	"	40	" 46 to 58
Member 3 and arch above node 114	0.914	.09**	.0267	.0388	"	38	" 3 and above 62.
Edge beam	2.274	03035*	.018	.06	38000		

* The high specific gravity caters for weight of asphalt, guardrails, railings and lower end of hangers.

** The high specific gravity caters for weight of windbracing and upper end of hangers.

*** In diagrams where nonlinear analysis has been used, E is divided by 1.32.

Fig. 76. Cross-sections used in the calculation of 200B.

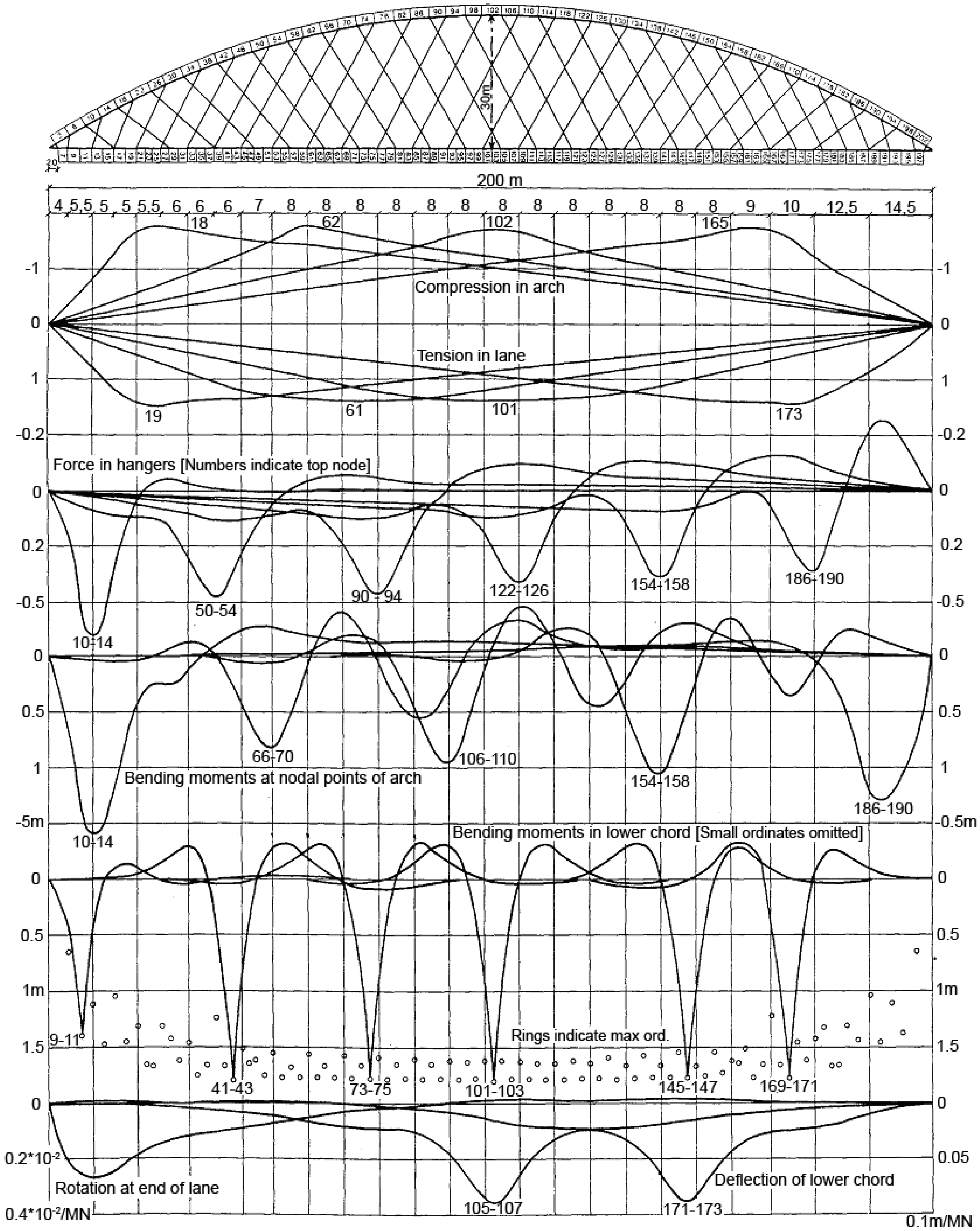

Fig. 77. Influence lines for a bridge spanning 200 m calculated for the IABSE congress in Vienna 1980

ÅKVIK SOUND, NORWEGIAN EDITION

The Åkvik Sound bridge network arch was designed because Norsk Stålforbund (Norwegian Steel Society) and the bridge office of The Norwegian Public Roads Administration were looking for competitive steel bridges with spans between 120 and 300 m.

The author presented the network arch at a seminar in April 1997. The two organisations came up with money to hire a student to assist the author in the design of a network arch for the Åkvik Sound in northern Norway. Alexandra Jay, a French student of mechanical engineering, was hired for the job.

Alexandra Jay proved very good at calculating the network arch by means of the ANSYS program. She also drew the diagrams for the network arch for the Åkvik Sound presented in this section. Originally the diagrams on pp. 81 to 88 were not meant for publication. In order to save work, the skeleton lines from 200B multiplied by the ratio of the spans (135/200) were used for the Åkvik Sound network arch. Tveit 1980a. 200B can be found on pp. 69 to 72.

The arch of the Åkvik Sound Bridge has been calculated using members that are straight between the nodal points. Constant curvature along the arch gives a 7 mm maximum deviation from a straight line between two adjacent nodal points. In the ultimate limit state the maximum axial force in the arch is around 10 MN. This gives an additional ~20 MPa bending stress in the nodes of the arch. The bending moments due to continuous curvature of the arch are indicated on part of p. 88.

Since the shapes of the skeleton lines of 200B and the Åkvik Sound Bridge are the same, there must be considerable similarities in the influence lines of the two spans. The ordinates are practically the same for the axial forces in the chords. See pp. 72, 78 and 79. There is more on this on p. 56.

There is also considerable likeness between the influence lines for the bending in the lower chord in figs 77 and 85. Had the spans been models of one another, the influence ordinates would have been proportional to the spans. See about model laws on page 56.

The maximum influence ordinate for bending in the lower chord of 200B is 1.8 m. This can be seen from fig. 77. The corresponding influence ordinate for the Åkvik Sound should have been 1.8*135/200=1.22. As can be seen from p. 82 it is 1.33. This is partly because the stiffness (EI) of the arch in 200B is 8.54 times the stiffness of the tie. In the network arch of the Åkvik Sound the stiffness of the arch is 3.09 times the stiffness of the lane. Thus the arch in 200B takes more bending than the arch in the Åkvik Sound. The area (stiffness) of the hangers will have a smaller influence.

The author assumes that the relative stiffness of the chords and the area of the hangers influence the size of the ordinates for bending moments in the arches. The maximum influence ordinates in the arches for the bending in the nodal points between member 90 and 94 and between member 130 and 134 are proportional to the span of the two arches.

From the three preceding paragraphs we can conclude the obvious. Model laws apply to the influence lines of normal forces in the chords. Bending in the chords is considerably influenced by the relative stiffness of the chords and possibly, but to a lesser extent, by the stiffness of the hangers.

Since there is little bending in the chords of a network arch, there is little need to know the exact magnitude of the bending moments in the chords before calculations by a computer program.

Deflection of the Åkvik Sound Bridge can be found using the influence lines in fig. 88. The biggest deflection due to live loads can be found in the middle of the span. It is about 81 mm. The span of the bridge is 1667 times this deflection.

Fig. 90, p. 87, gives forces when the smaller edge beam is cast. A HE 200B in the temporary lower chord has been assumed for these calculations. The stiffness of the part of the edge beam that has already been cast has been disregarded. Just below the middle of p. 27 there is some good reasoning on the forces in the temporary lower chord.

The right hand side of the diagram on p. 87 shows the forces when 12.23 metres at both ends of the span carry the concrete of the lighter edge beam before it is hardened. The left side of the same diagram shows the forces when 32.5 metres at both ends of the span carry the concrete of the lighter edge beam before it is hardened.

In order to prevent the relaxing of hangers, the casting starts from the ends of the span and proceeds towards the middle. The loads on one side of the span are as follows:

Reinforcement	2.4 kN/m
Wooden formwork	1.3 kN/m
Prestressing cables	0.7 kN/m
Sum:	4.4 kN/m
Weight of edge beam	10.4 kN/m
Sum:	14.8 kN/m

In addition to these weights comes the weight of the steel in the lower chord. For both sides of the span the total weight of the lower chord is ~1.7 kN/m. A load factor of 1.2 is used for the loads during the casting of the small edge beam. From fig. 90 it can be seen that the edge beam will not be overly distorted during the casting. Thus there are only small built-in bending moments in the small edge beam. The tension in the hangers is big enough to keep them reasonably straight while the edge beam is cast.

The steel in the longitudinal beam of the temporary lower chord has $f_y=460$ N/mm^2. The longitudinal beam in the temporary lower chord in figs 21 and 22 on p. 12 is HE 220 AA. It has a bending moment capacity 205 kNm. This is about ten times greater than the biggest bending moment in the temporary lower chord in fig. 90.

In the arch the bending moment capacity is more than 40 times the bending moment. The tensile capacity of the temporary lower chord is over 2 MN. The prestressing cables take some of the tensile force during and after the casting of the tie. Thus the deflection shown in p. 87 will not occur. Friction losses in the prestressing cables due to wobble will be reduced because there is tension in the prestressing cables during the casting of the edge beams.

When the smaller edge beam is cast, there is very uneven load on the two arches. The hangers under the stronger arch will restrain the relaxation of the hangers under the weaker arch. This effect has been disregarded.

In the ultimate limit state the maximum force in a hanger is 539 kN. On pp. 87 to 92 the bending moments are given in the rectangle to the right of the points where they occur.

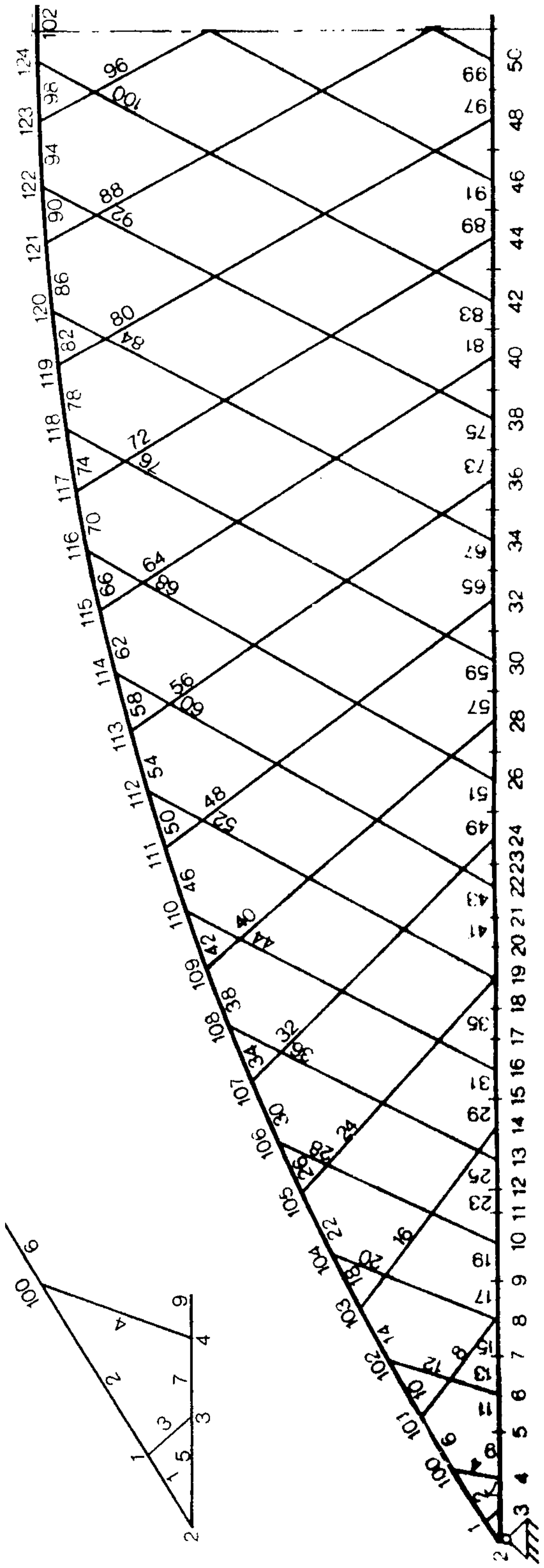

Fig. 78. Skeleton lines for the Åkvik Sound network arch

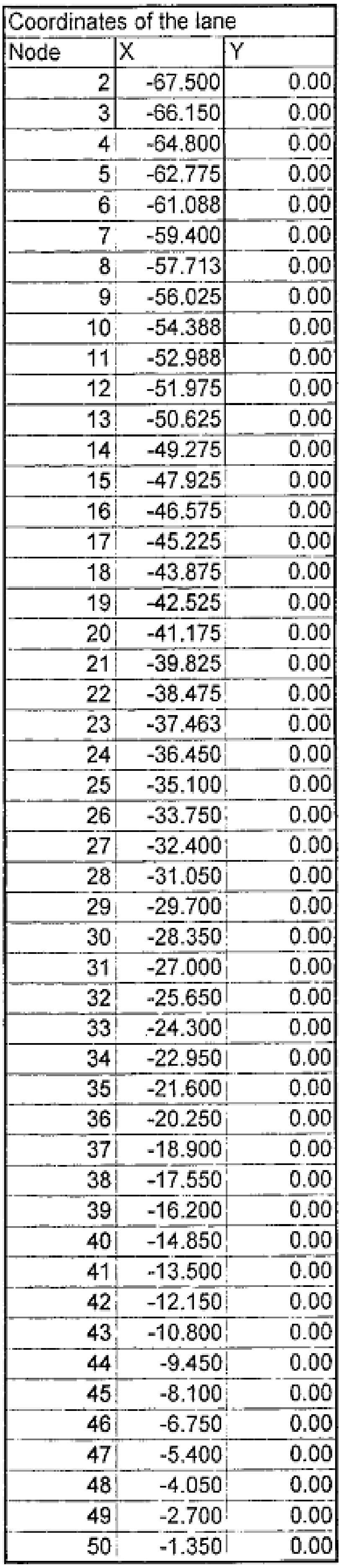

Coordinates of the lane		
Node	X	Y
2	-67.500	0.00
3	-66.150	0.00
4	-64.800	0.00
5	-62.775	0.00
6	-61.088	0.00
7	-59.400	0.00
8	-57.713	0.00
9	-56.025	0.00
10	-54.388	0.00
11	-52.988	0.00
12	-51.975	0.00
13	-50.625	0.00
14	-49.275	0.00
15	-47.925	0.00
16	-46.575	0.00
17	-45.225	0.00
18	-43.875	0.00
19	-42.525	0.00
20	-41.175	0.00
21	-39.825	0.00
22	-38.475	0.00
23	-37.463	0.00
24	-36.450	0.00
25	-35.100	0.00
26	-33.750	0.00
27	-32.400	0.00
28	-31.050	0.00
29	-29.700	0.00
30	-28.350	0.00
31	-27.000	0.00
32	-25.650	0.00
33	-24.300	0.00
34	-22.950	0.00
35	-21.600	0.00
36	-20.250	0.00
37	-18.900	0.00
38	-17.550	0.00
39	-16.200	0.00
40	-14.850	0.00
41	-13.500	0.00
42	-12.150	0.00
43	-10.800	0.00
44	-9.450	0.00
45	-8.100	0.00
46	-6.750	0.00
47	-5.400	0.00
48	-4.050	0.00
49	-2.700	0.00
50	-1.350	0.00

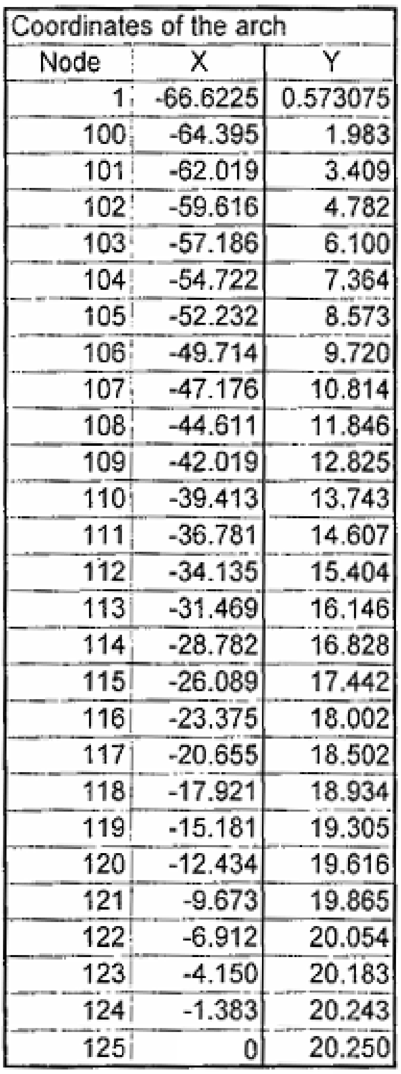

Coordinates of the arch		
Node	X	Y
1	-66.6225	0.573075
100	-64.395	1.983
101	-62.019	3.409
102	-59.616	4.782
103	-57.186	6.100
104	-54.722	7.364
105	-52.232	8.573
106	-49.714	9.720
107	-47.176	10.814
108	-44.611	11.846
109	-42.019	12.825
110	-39.413	13.743
111	-36.781	14.607
112	-34.135	15.404
113	-31.469	16.146
114	-28.782	16.828
115	-26.089	17.442
116	-23.375	18.002
117	-20.655	18.502
118	-17.921	18.934
119	-15.181	19.305
120	-12.434	19.616
121	-9.673	19.865
122	-6.912	20.054
123	-4.150	20.183
124	-1.383	20.243
125	0	20.250

Fig. 79. Co-ordinates for the Åkvik Sound network arch

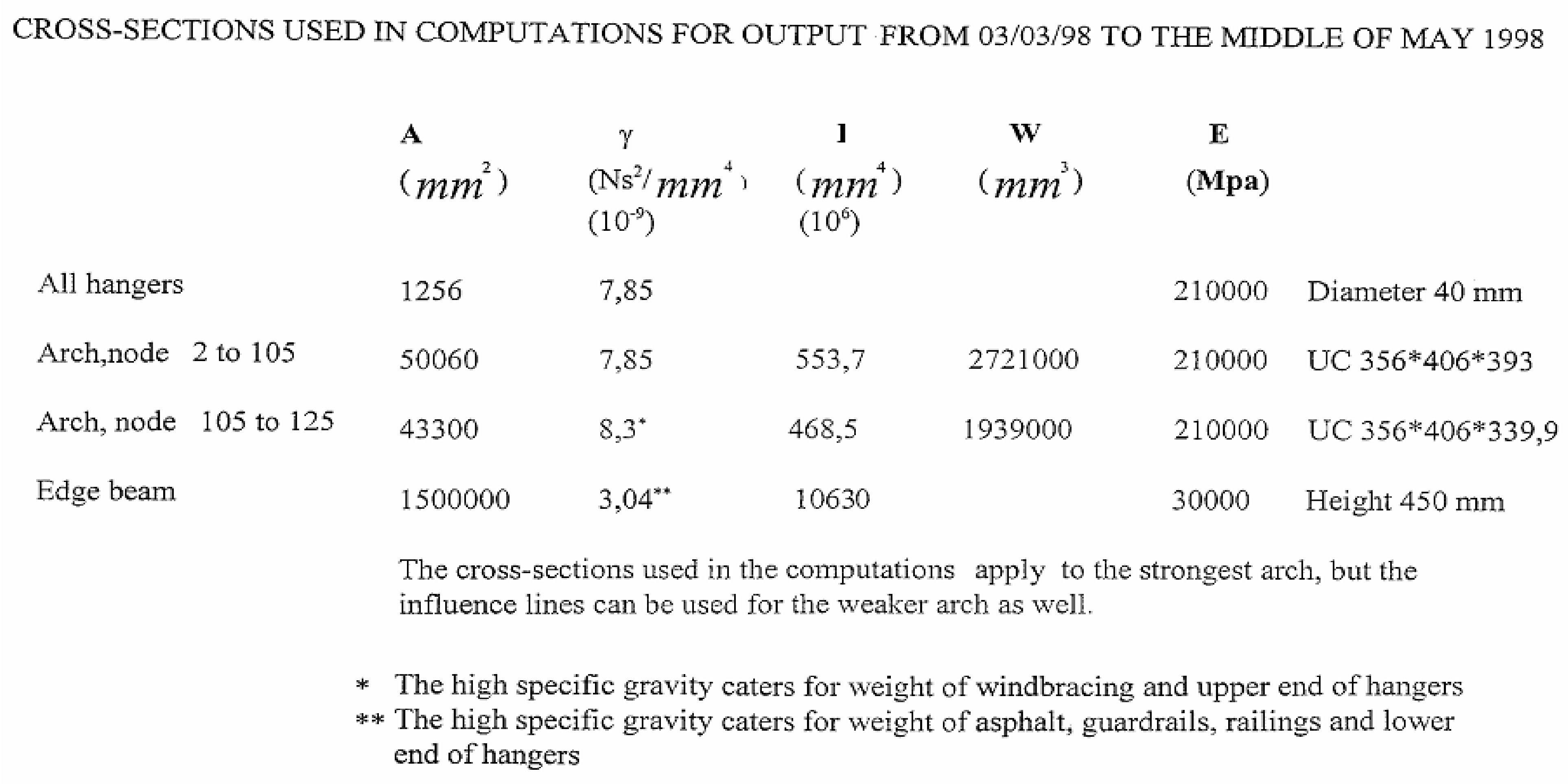

CROSS-SECTIONS USED IN COMPUTATIONS FOR OUTPUT FROM 03/03/98 TO THE MIDDLE OF MAY 1998

	A (mm^2)	γ (Ns^2/mm^4) (10^{-9})	**I** (mm^4) (10^6)	**W** (mm^3)	**E** **(Mpa)**	
All hangers	1256	7,85			210000	Diameter 40 mm
Arch,node 2 to 105	50060	7,85	553,7	2721000	210000	UC 356*406*393
Arch, node 105 to 125	43300	8,3*	468,5	1939000	210000	UC 356*406*339,9
Edge beam	1500000	3,04**	10630		30000	Height 450 mm

The cross-sections used in the computations apply to the strongest arch, but the influence lines can be used for the weaker arch as well.

* The high specific gravity caters for weight of windbracing and upper end of hangers
** The high specific gravity caters for weight of asphalt, guardrails, railings and lower end of hangers

Fig. 80. Cross-sections used in the final calculations for the Åkvik Sound network arch

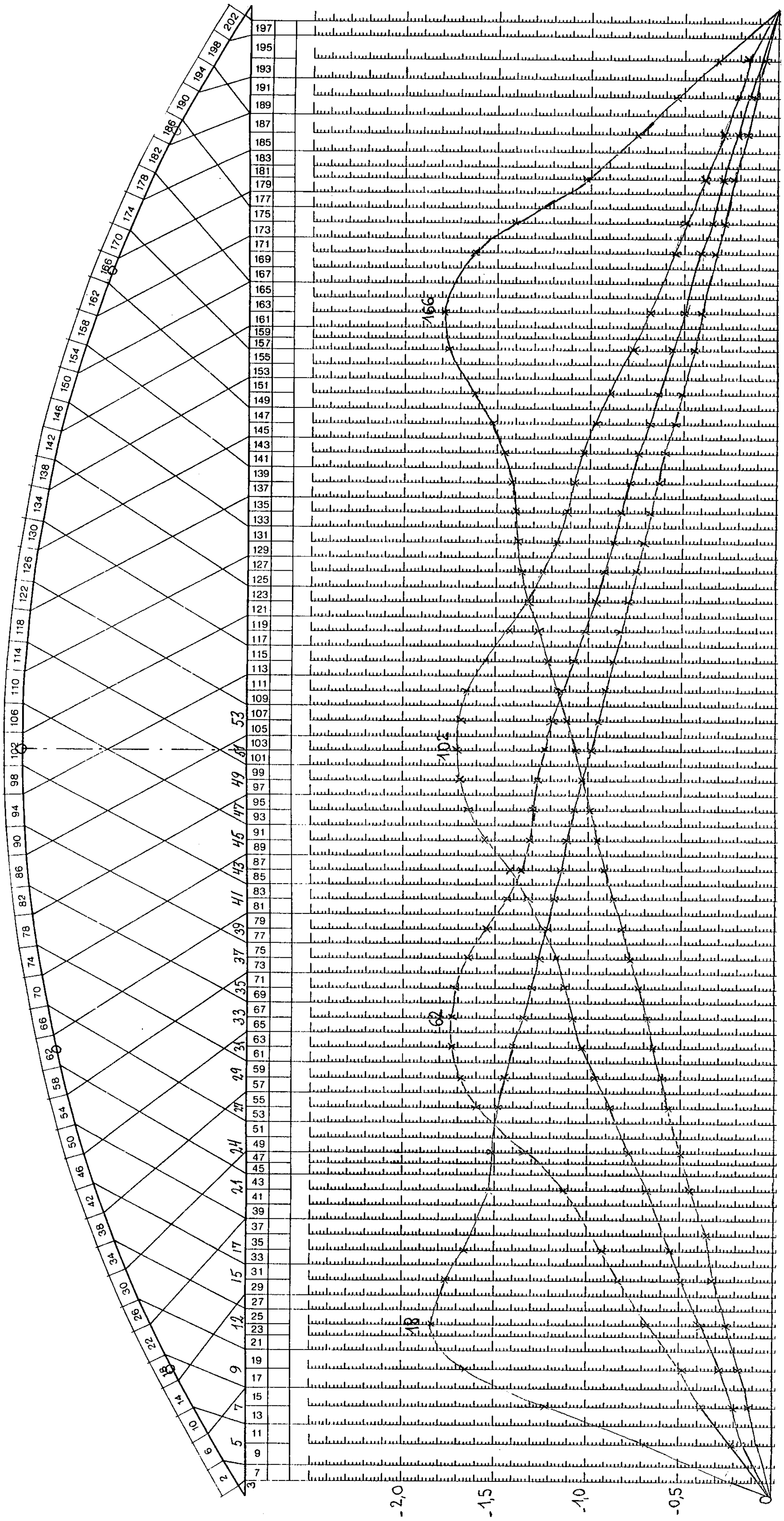

Fig. 81. Influence lines for compression in the arch of the Åkvik Sound network arch

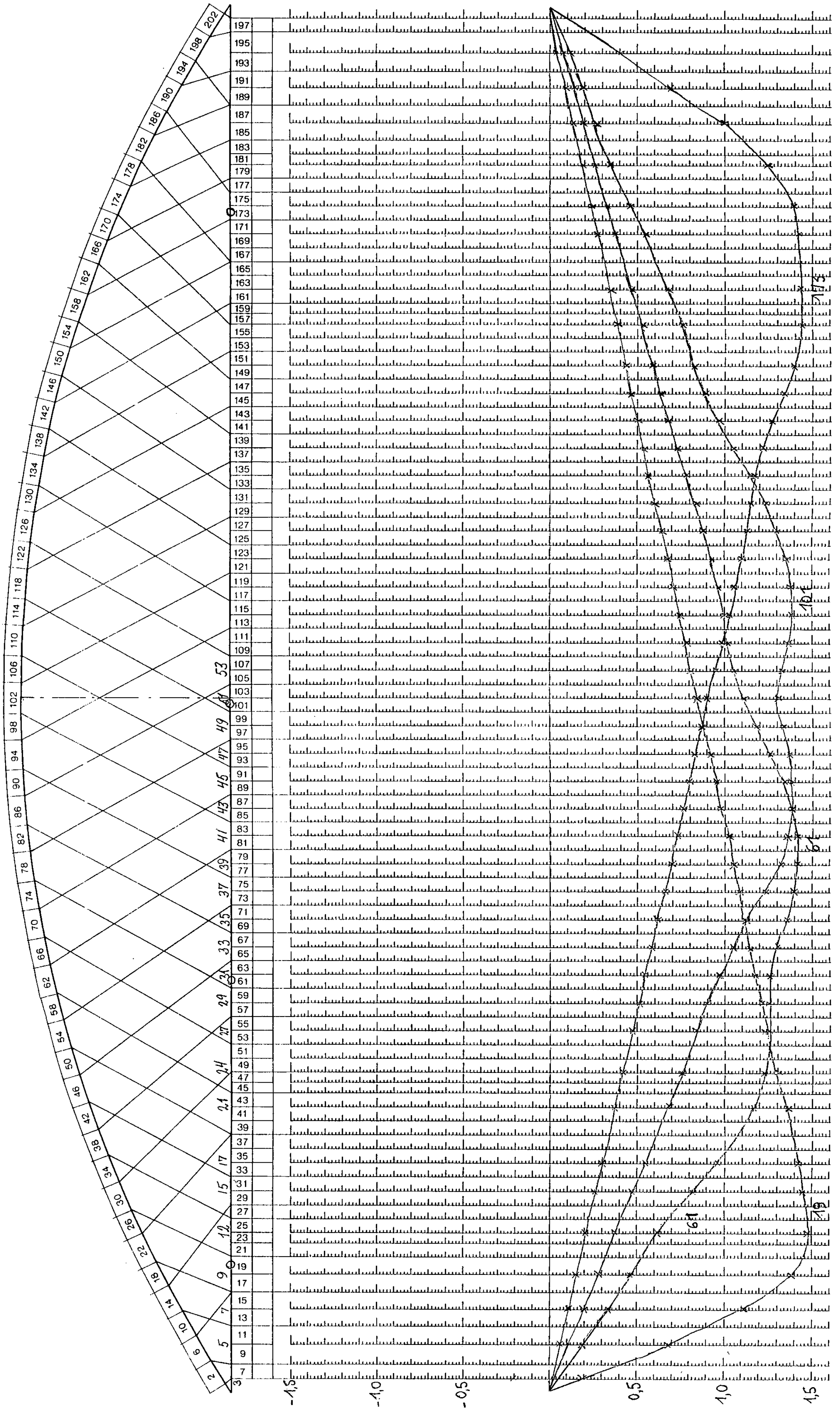

Fig. 82. Influence lines for tension in the tie of the Åkvik Sound network arch

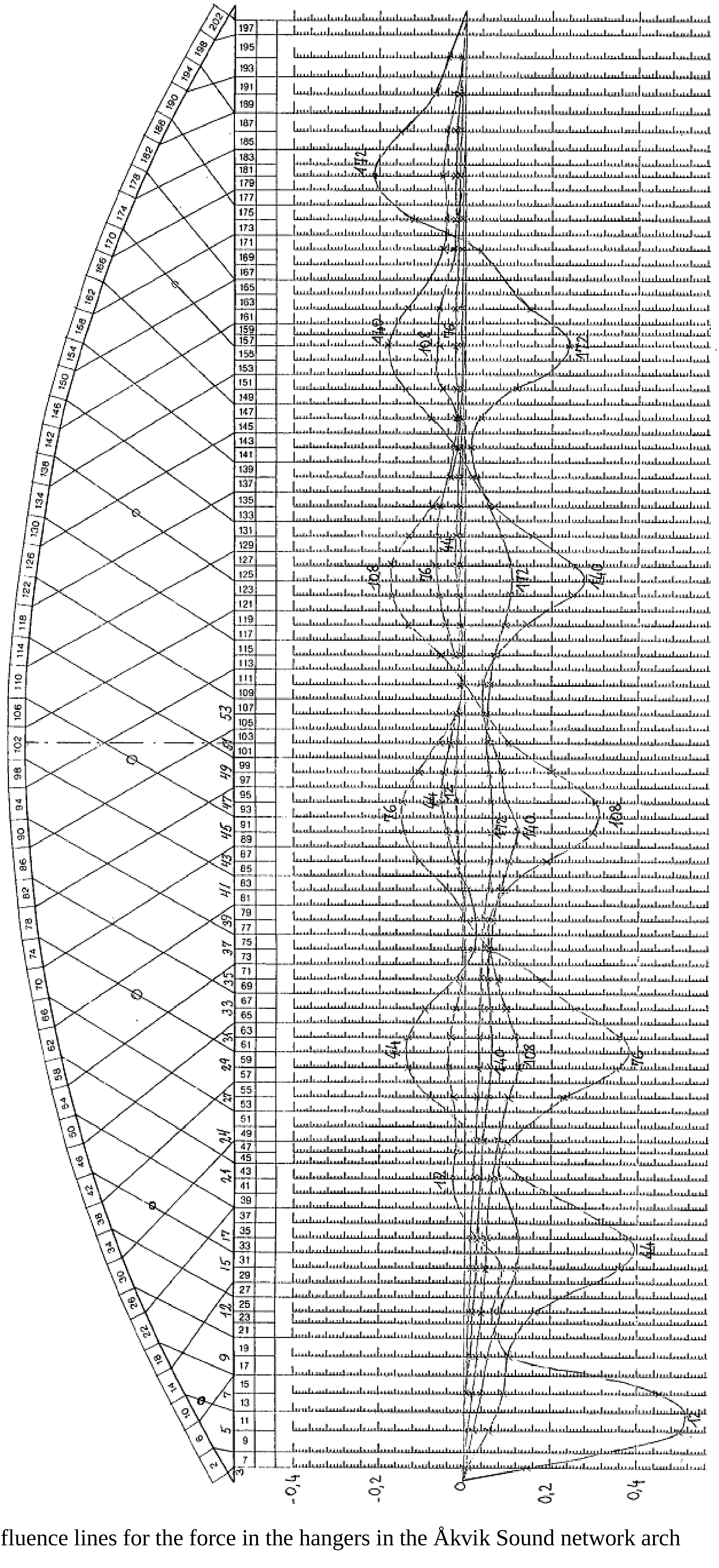

Fig. 83. Influence lines for the force in the hangers in the Åkvik Sound network arch

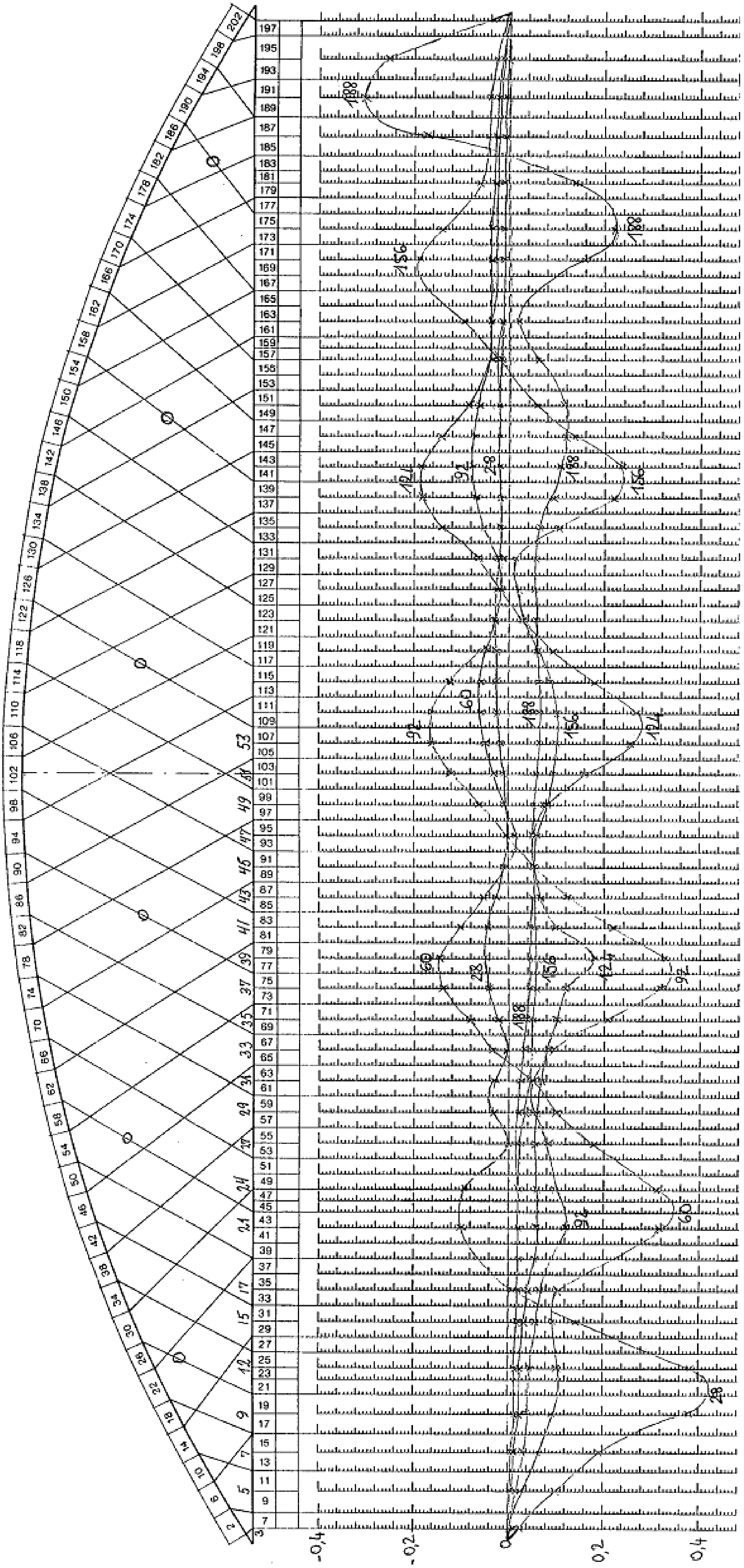

Fig. 84. More influence lines for the force in the hangers of the Åkvik Sound network arch

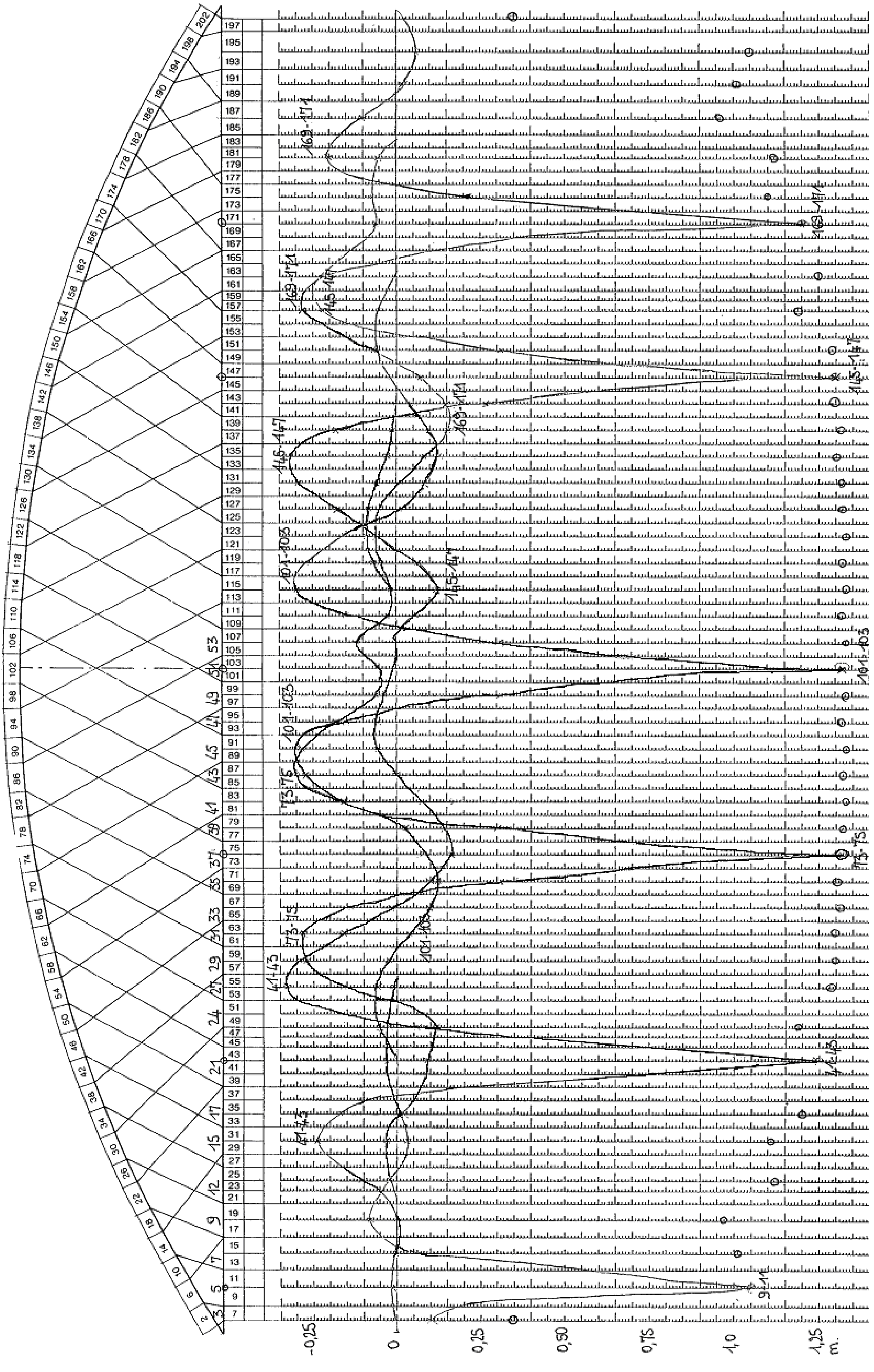

Fig. 85. Influence lines for the bending moments in the lower chord of the Åkvik Sound network arch

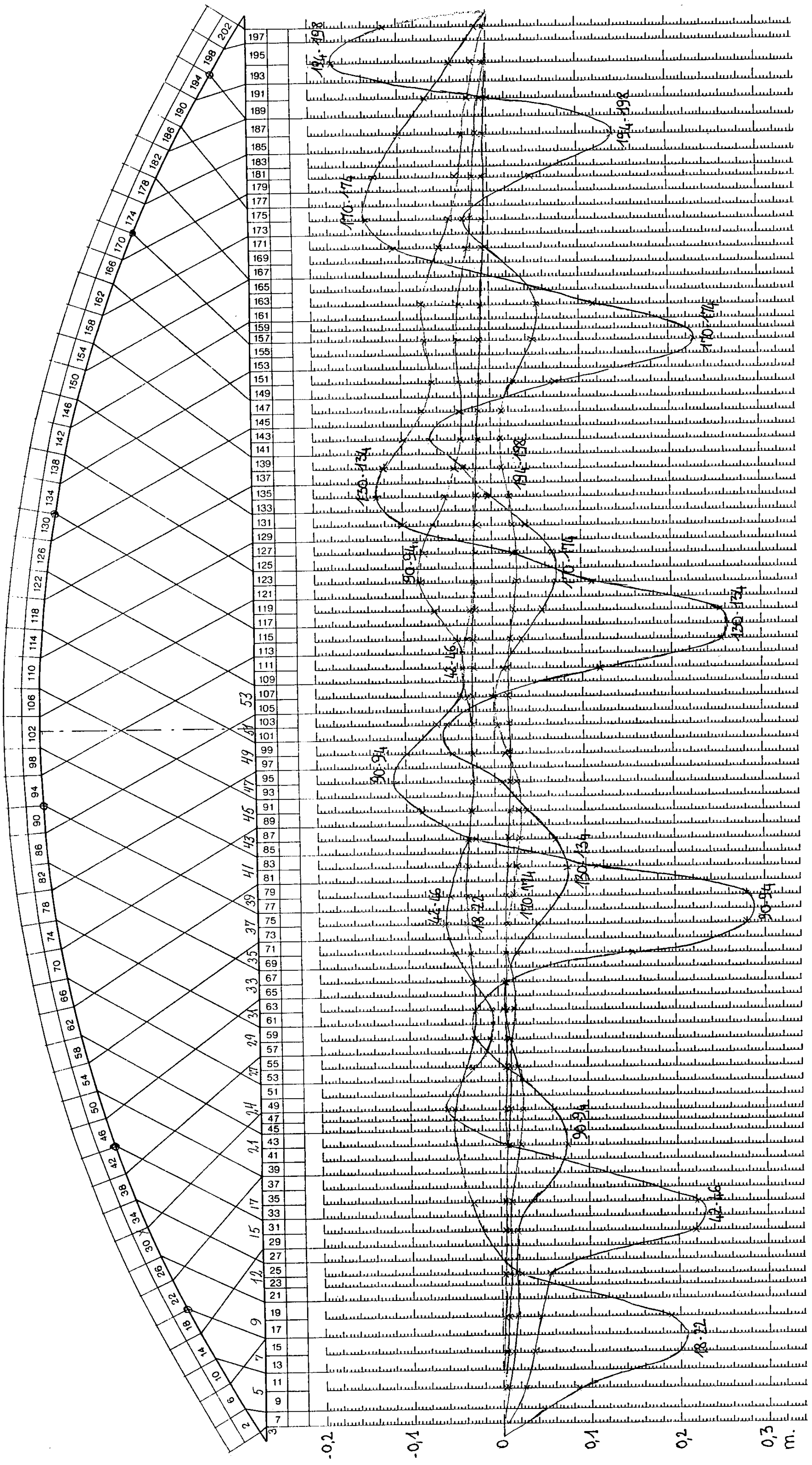

Fig. 86. Influence lines for the bending moments in the arch of the Åkvik Sound network arch

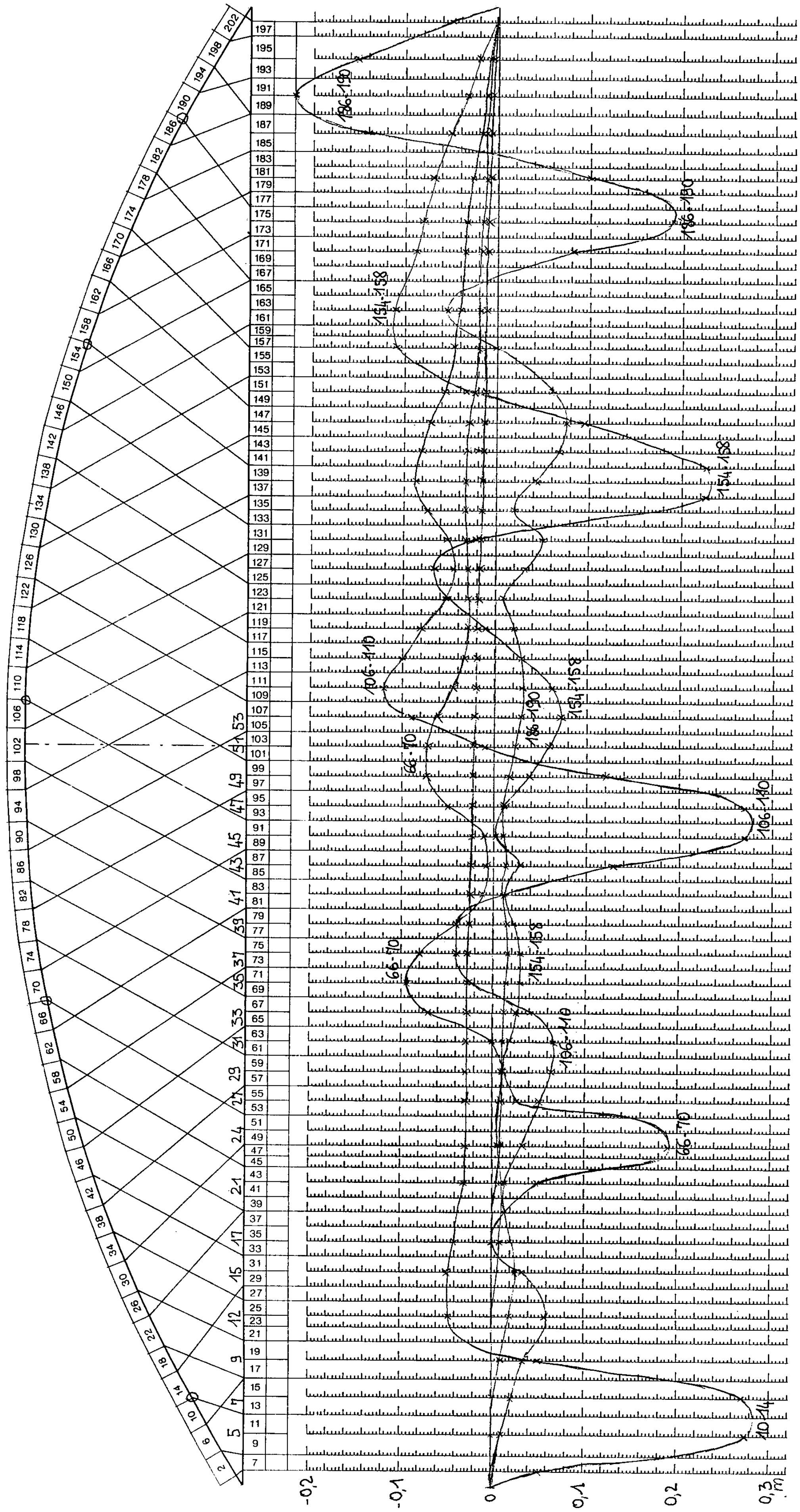

Fig. 87. More influence lines for the bending moments in the arch of the Åkvik Sound network arch

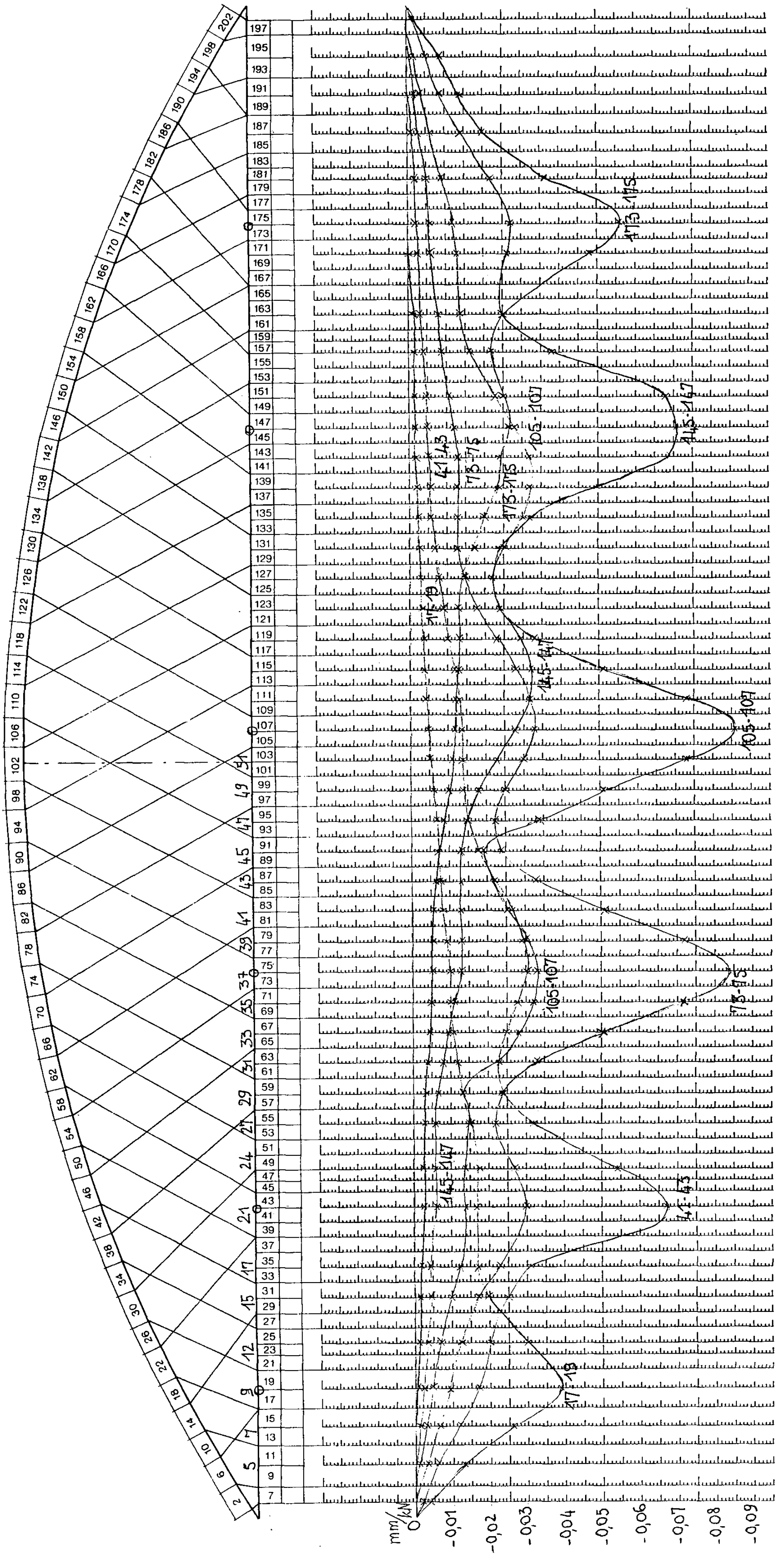

Fig. 88. Influence lines for the deflection of the lower chord of the Åkvik Sound network arch

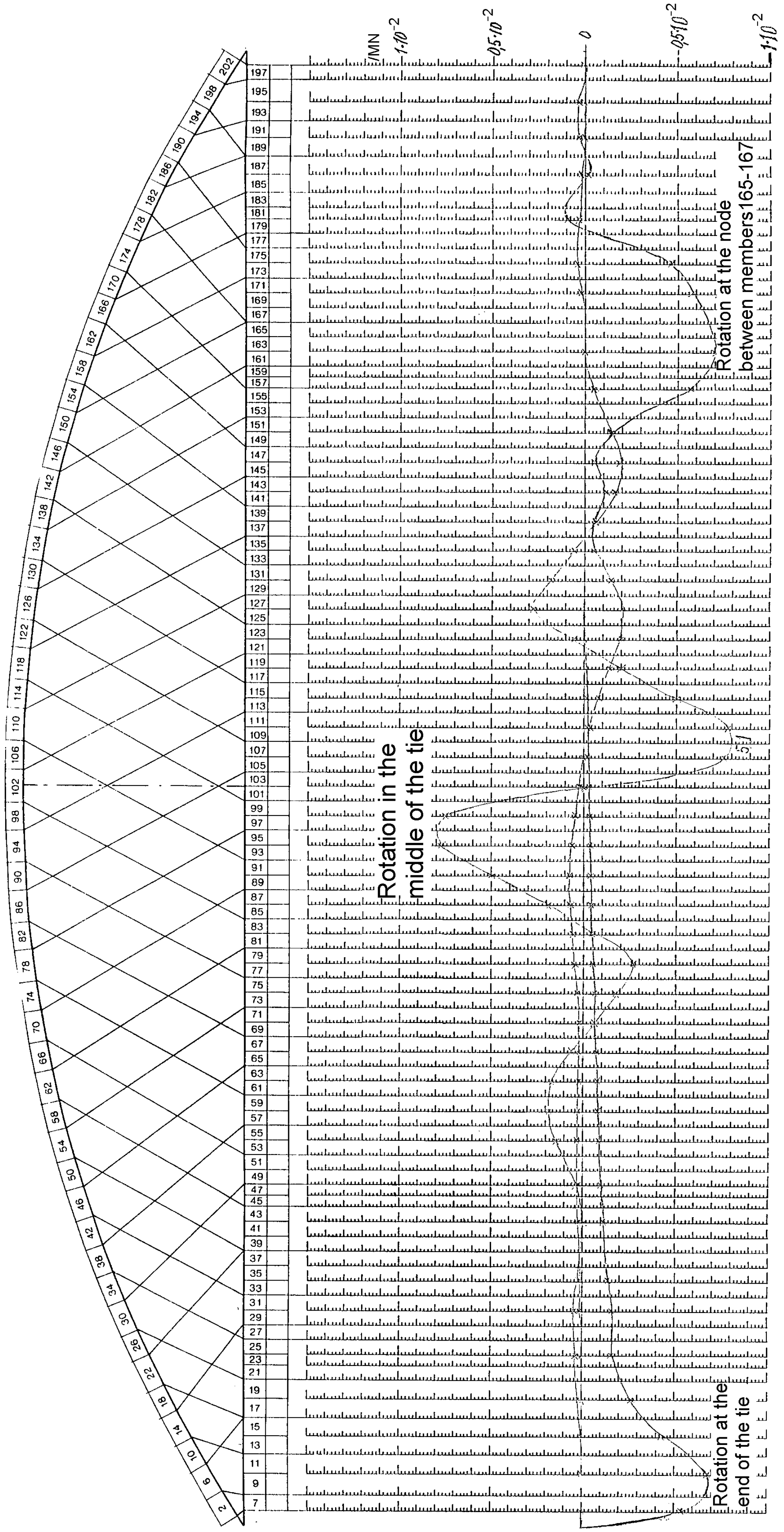

Fig. 89. Influence lines for the rotation in the lower chord of the Åkvik Sound network arch

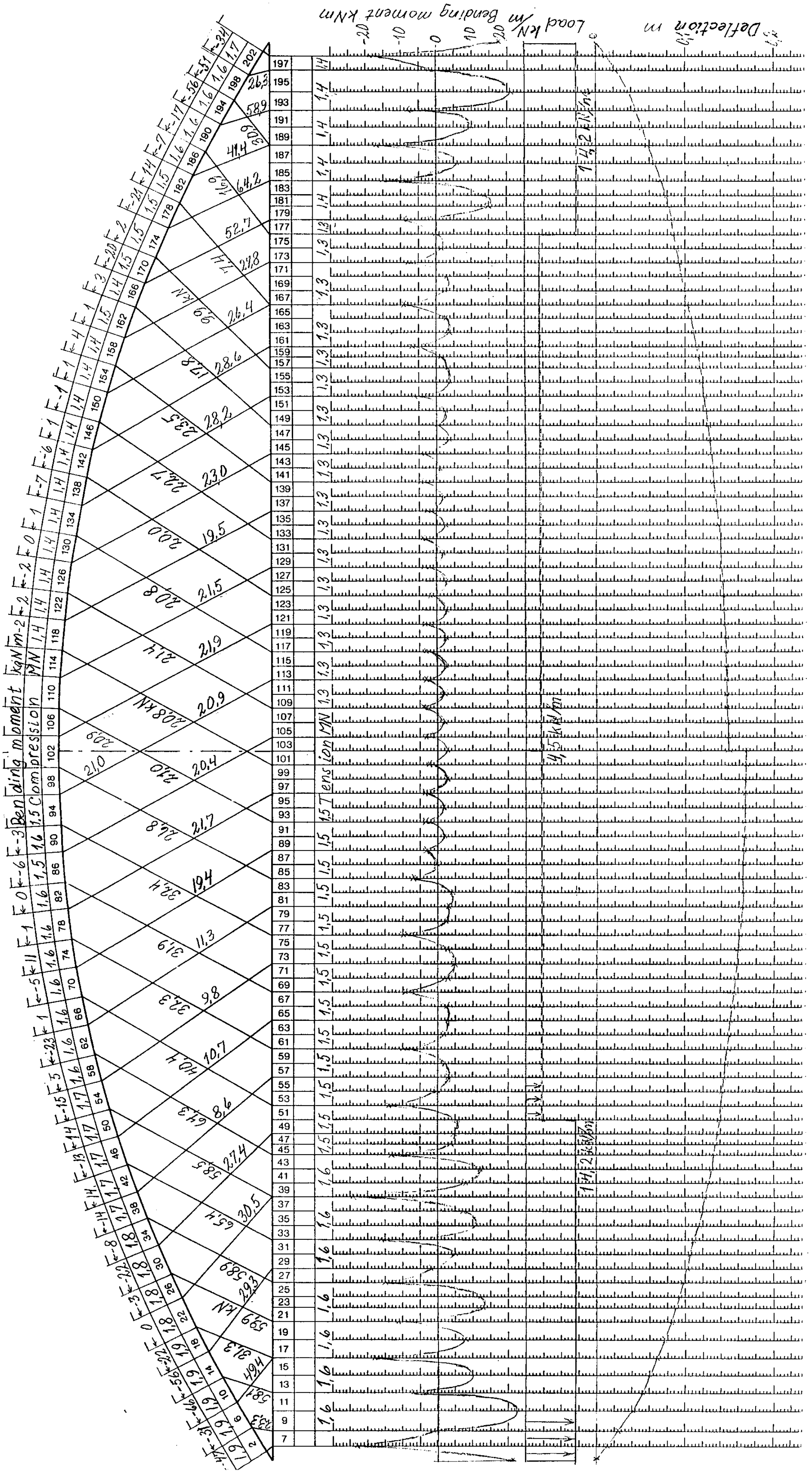

Fig. 90. Forces in the Åkvik Sound network arch when the smaller edge beam is cast. Loads and stiffnesses are explained on p. 74. The two halves of the drawing show the effects of two load cases. On the left side of the drawing the casting has come to 32.5 m from the end of the bridge. On the right side of the drawing the casting has come to 18.2 m from the end the bridge. The stiffness of the concrete cast has been disregarded.

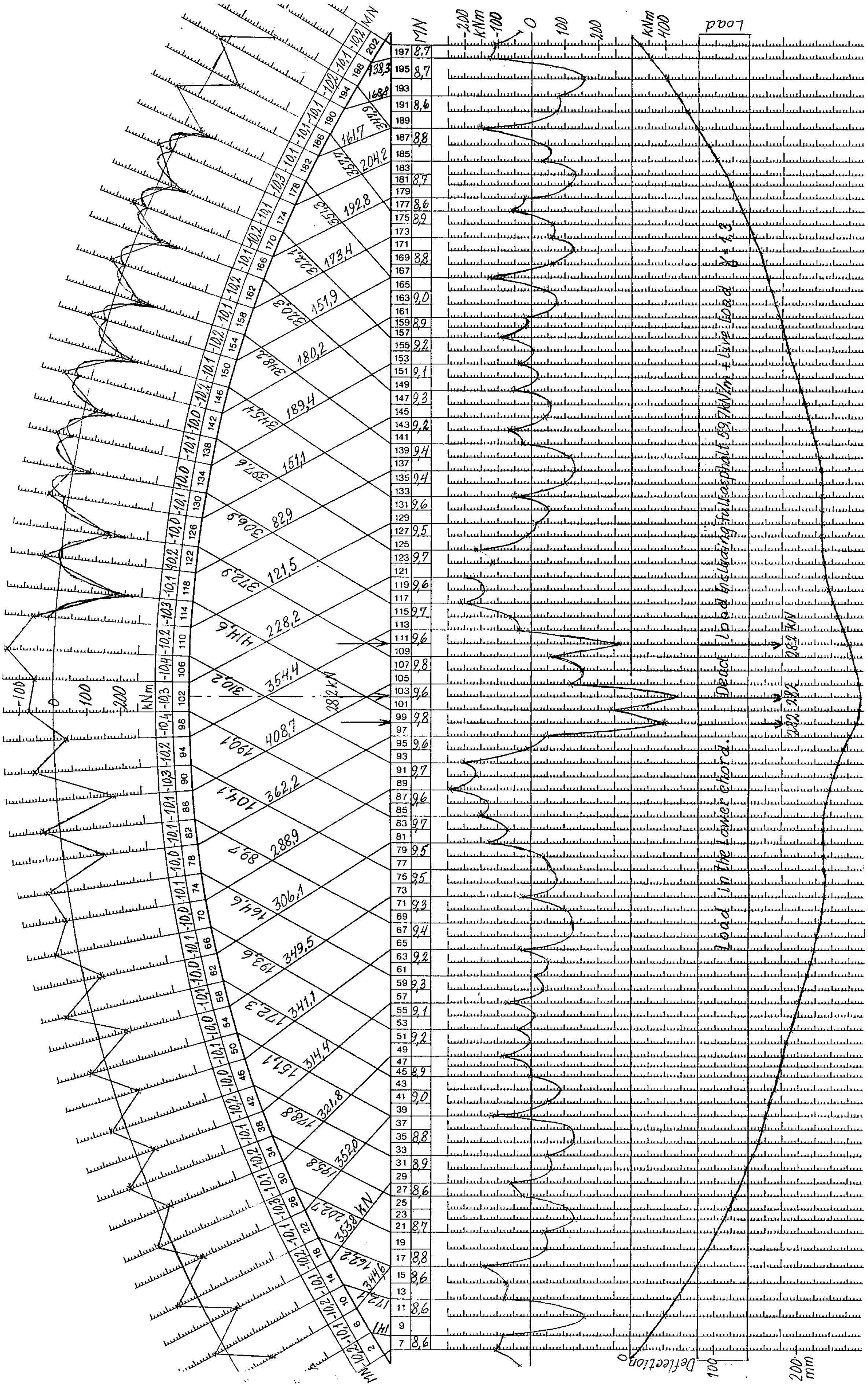

Fig. 91. Maximum load on the Åkvik Sound network arch in the ultimate limit state. The wheel loads are in the middle of the span

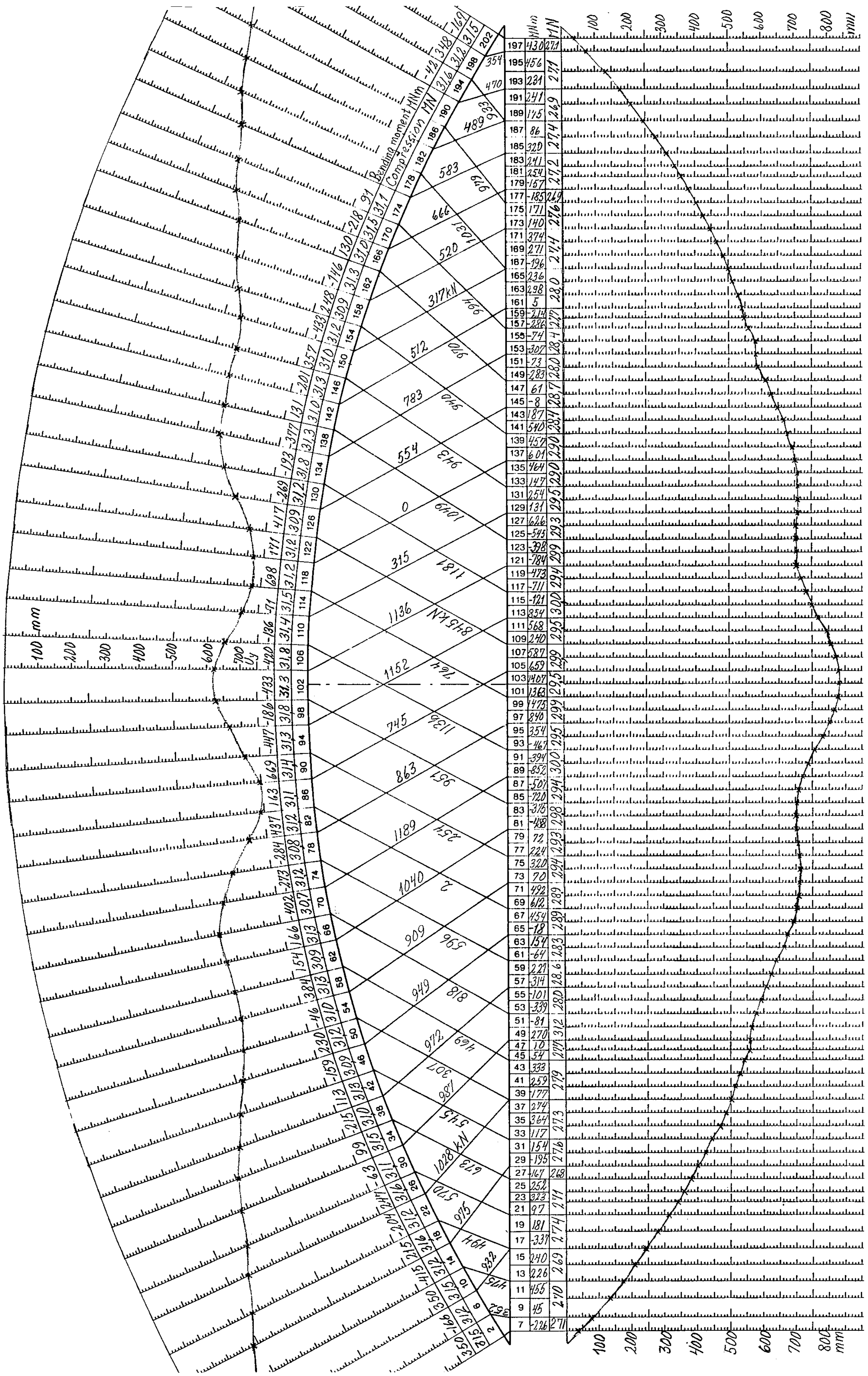

Fig. 92. Forces and deflections just before elastic buckling due to the evenly distributed load on the Åkvik Sound network arch

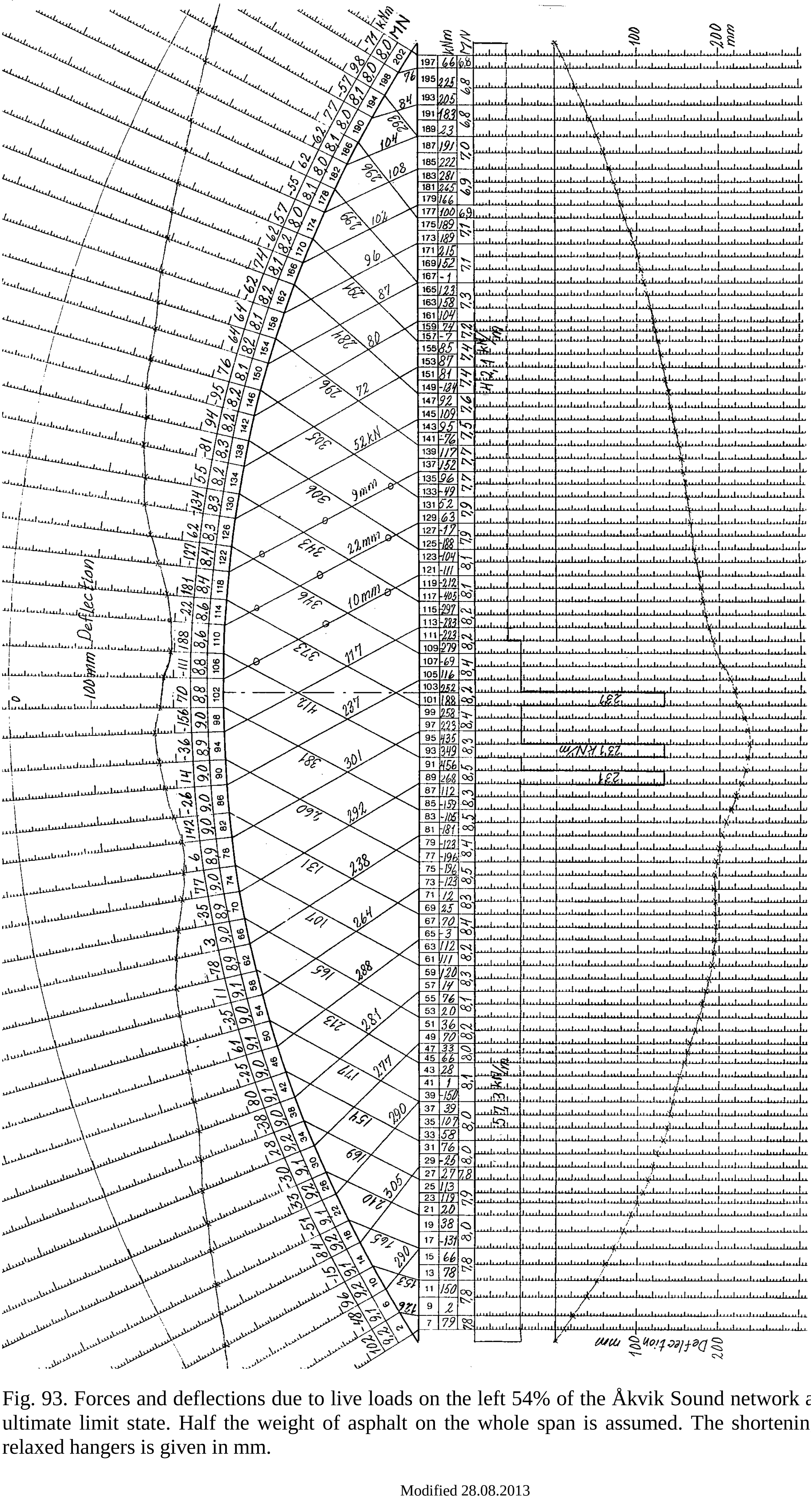

Fig. 93. Forces and deflections due to live loads on the left 54% of the Åkvik Sound network arch in the ultimate limit state. Half the weight of asphalt on the whole span is assumed. The shortening of three relaxed hangers is given in mm.

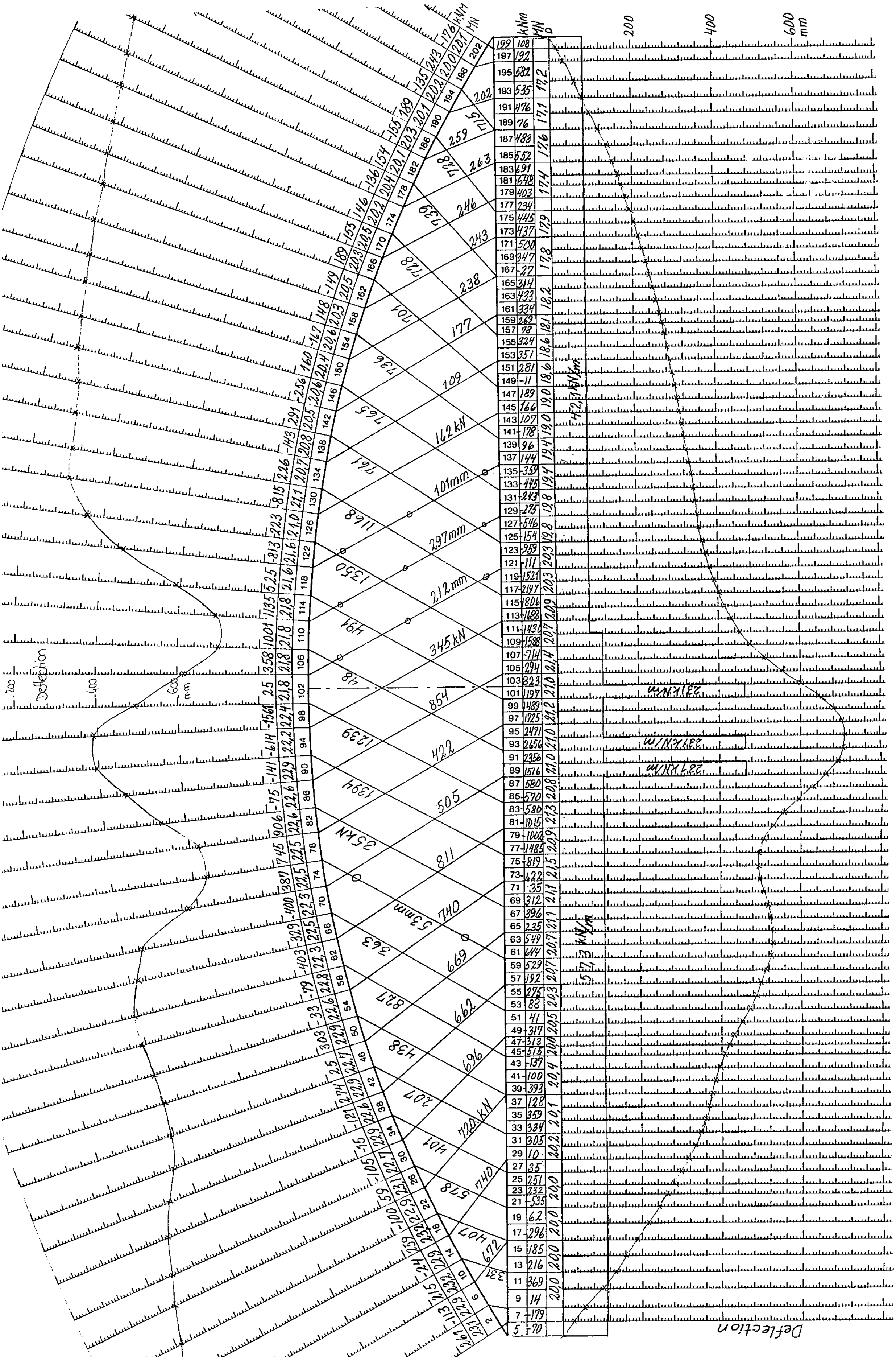

Fig. 94. Forces and deflections just before elastic buckling due to load on the left 54% of the Åkvik Sound network arch. The shortening of three relaxed hangers is given in mm.

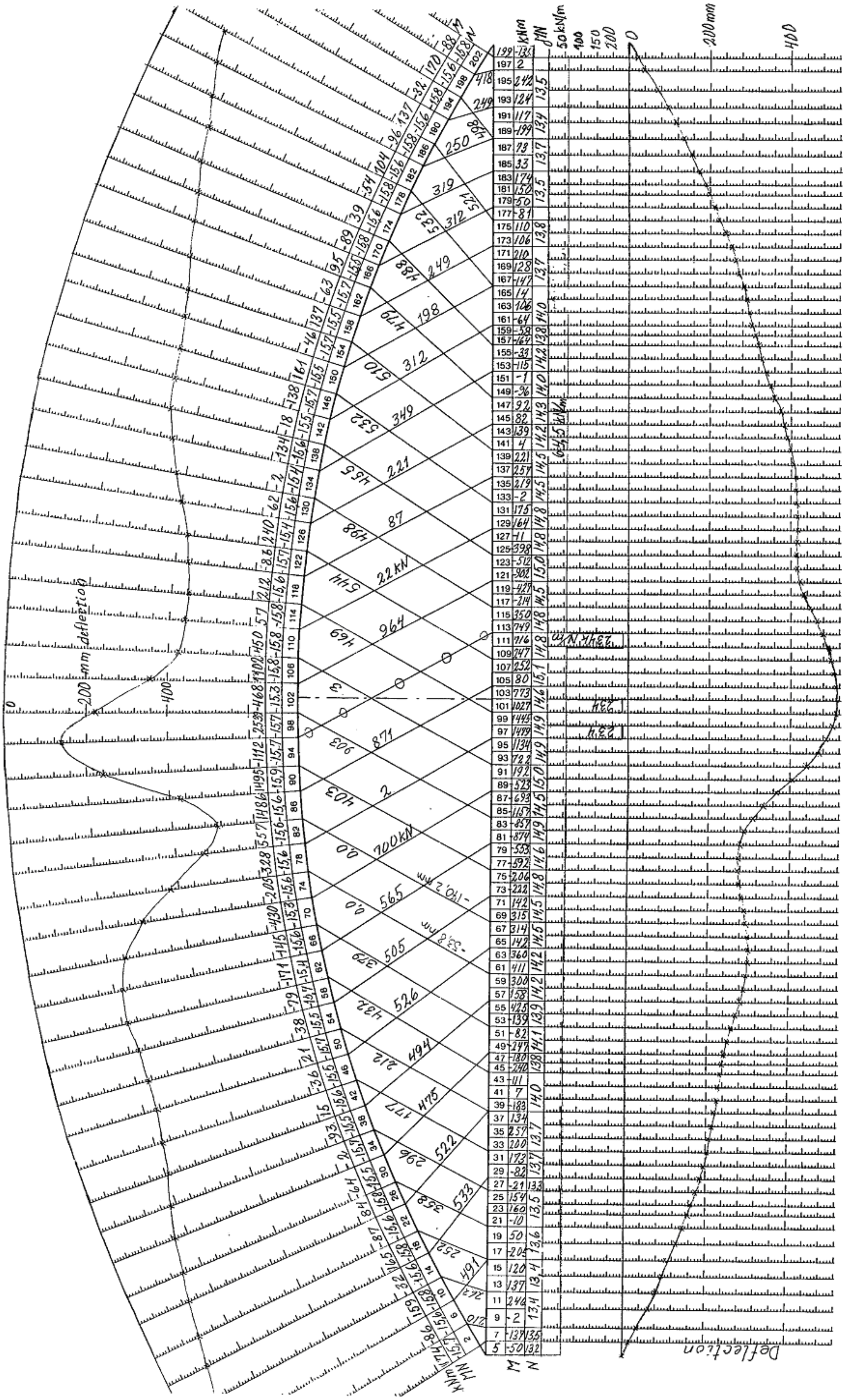

Fig. 96. Forces and deflections just before buckling when one hanger in the middle of the Åkvik Sound network arch is broken

NETWORK ARCH BRIDGE OVER THE RIVER LUZNICE (Czech Republic) Built 2005

Designer: Ladislav Šašek, PhD, Mott MacDonald, Prague

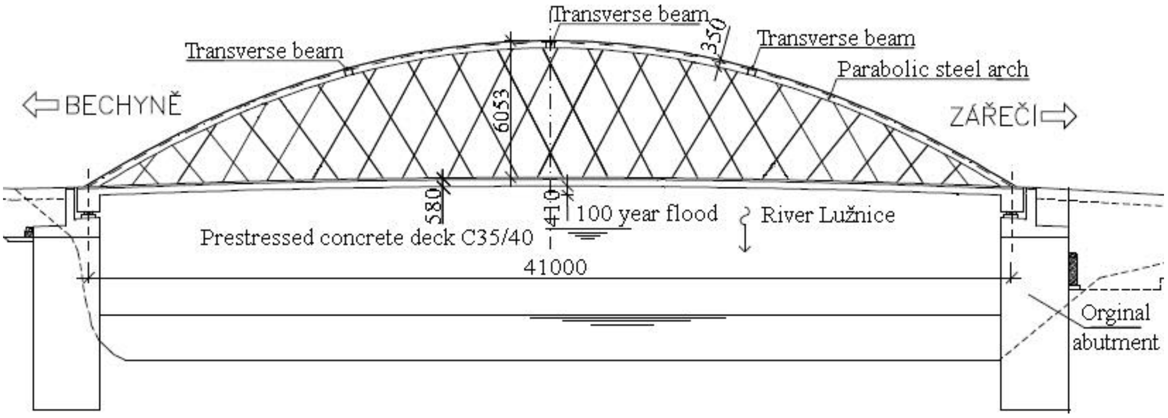

Fig. 96a. Longitudinal section

The bridge is located in the lovely valley of the river Lužnice. Very attractive historical scenery of the town Bechyně just underneath the castle called for a slender and fragile structure, which will blend into its environment, particularly where the dimensional relationships and scale are concerned.

The structural form is a tied arch where the arch is made of steel and the tie is a prestressed concrete deck with many inclined hangers that have multiple intersections. It has two steel arches with a rise of 6.05 m. The sections of arches are welded, in the shape of an inverted letter U. Hangers are made from stainless steel rods. The concrete slab thickness varies from 250 mm – 300 mm below road line, 500 mm below hangers to 180 mm below sidewalks.

The bridge span is 41 m. The construction can be very slender as the bending in the steel arches and concrete tie is small. 7 days after hardening of the concrete the hangers were tightened and the deck was prestressed by 4 tendons. After stressing, the structure was able to carry the load and the scaffolding was removed. In order to control stresses, great care was needed in the adjustment of the hangers. The way Dr. Šašek hides the cables and tubes under the footpath is new and very recommendable. See fig. 96b. The author would have liked the arch to be part of a circle.

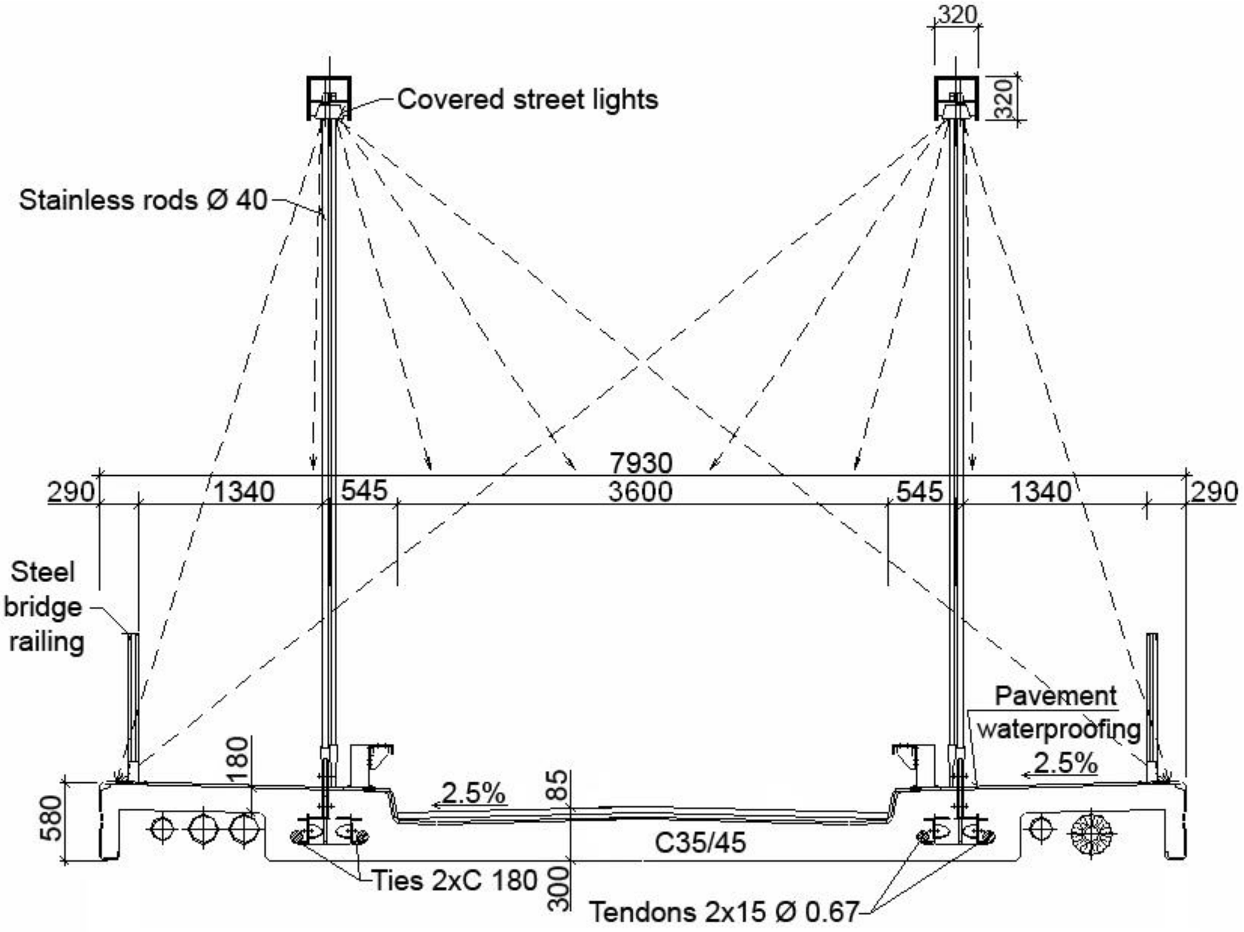

Fig. 96b. Cross-section of the Beckyne Bridge

Fig. 96c. Bechyne network arch by day

The bridge in Bechyne replaces an old bridge with too little room for the 100 year flood. The existing roads on both sides of the bridge needed only small alterations. (Šašek 2005) and (Šašek 2006).

Night lighting is designed for everyday use and is supplied by two lamp posts on both sides of the bridge. Lighting for special occasions is created with 36 lamps placed in the inverted U sections of arches. The conception of this type of lighting focuses on emphasising the network of stainless hangers as a characteristic feature of the bridge.

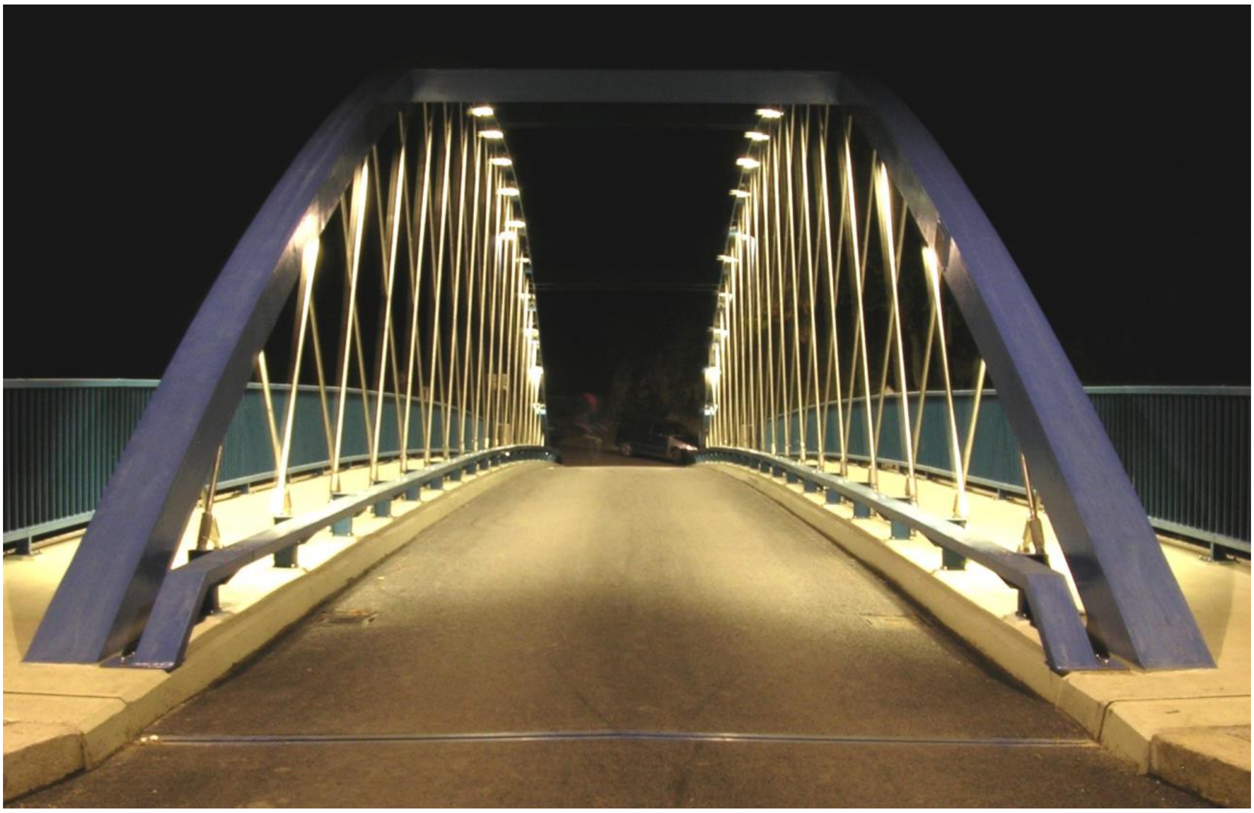

Fig. 96d. Bechyne network arch by night

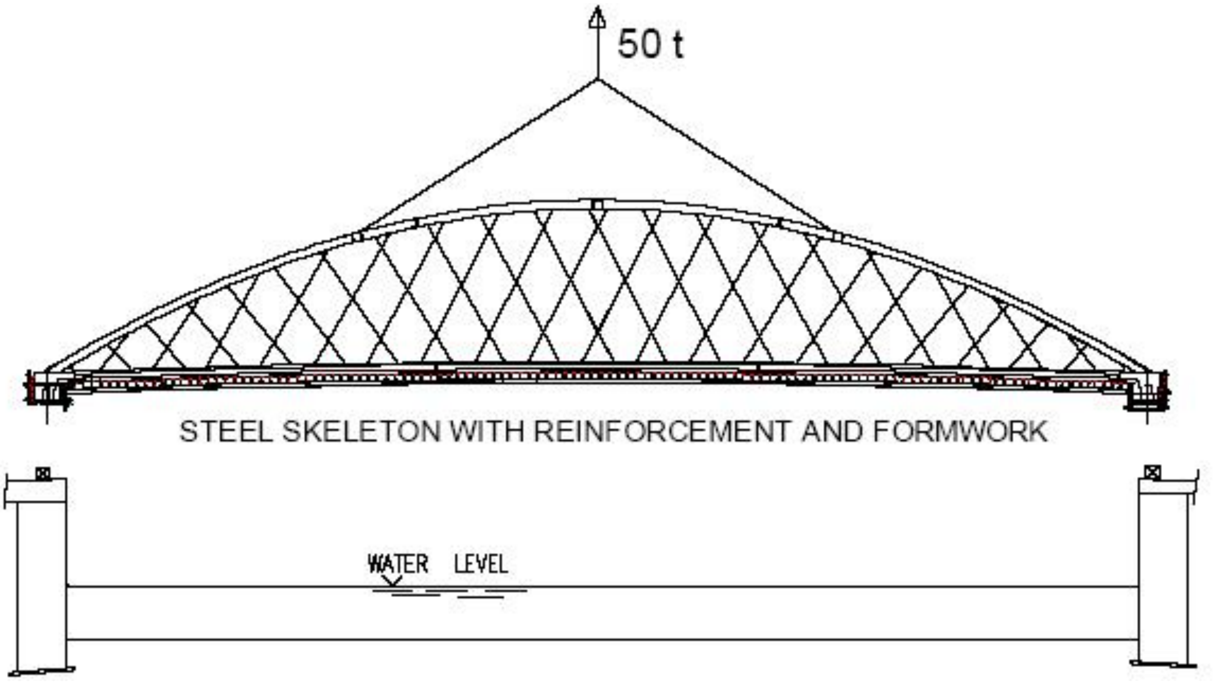

Fig 96e. Proposed method of erection for the Bechyne network arch

The method of erection suggested in fig. 96e is very like a method that the author suggested in June 2004, Tveit 2004, but that is a coincidence.

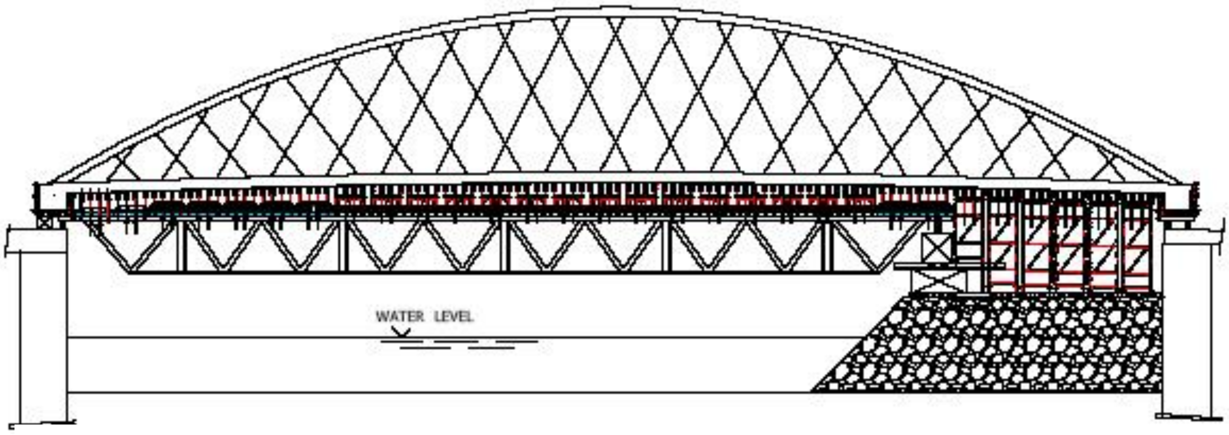

Fig. 96f. Contractor's method of erection for the network arch at Bechyne

The amount of materials used per m^2 is:

Concrete	0.316 m^3
Reinforcement	66 kg
Prestressing steel	9.3kg
Construction steel	101 kg

Dr. Ladislav Šašek heard about the network arch from a colleague. Then he looked at the author's homepage and went ahead with the design. The author never heard about the Bechyne Bridge until it was finished. He was most impressed.

A thorough analysis of Dr. Sasek's bridge over the Luznice river was the topic for the Master's thesis by Aljandro Niklison from Argentina. It can be found at
http://www.ibb.uni-stuttgart.de/publikationen/fulltext/2010/niklison-2010.pdf

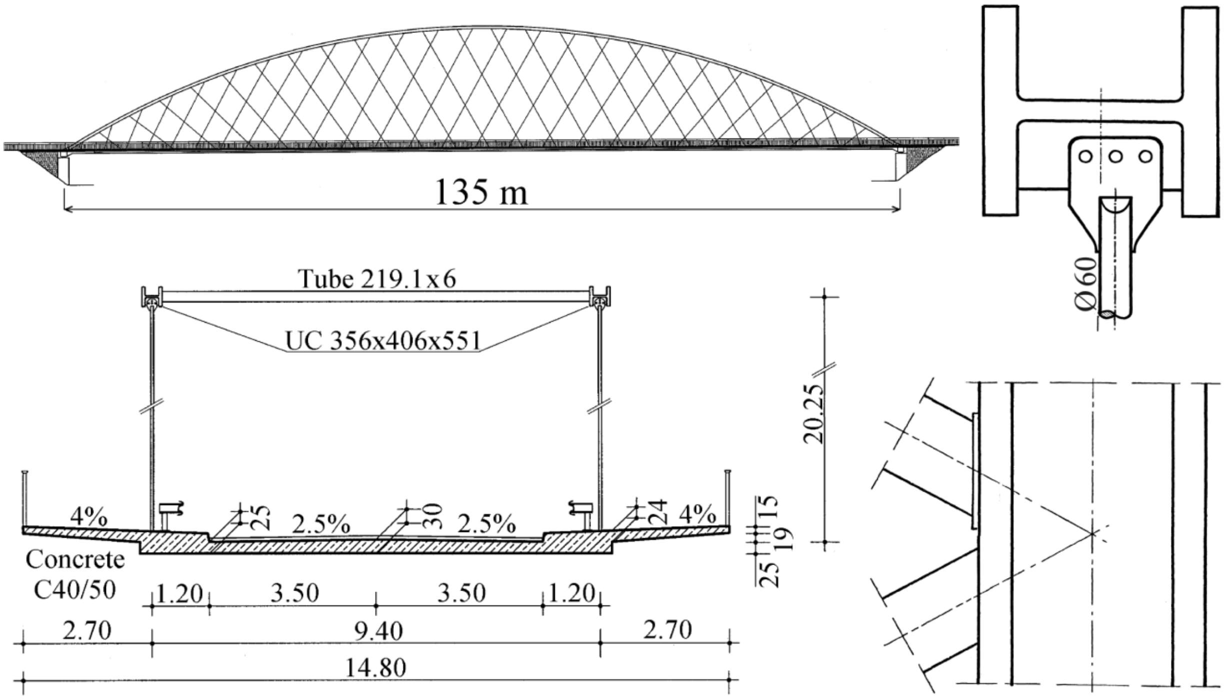

Fig. 97. The Åkviksound network arch designed according to EU codes. Teich and Wendelin 2001.

OPTIMAL NETWORK ARCHES COMPARED TO OTHER STEEL BRIDGES

Two very able students of Professor W. Graße in TU-Dresden wrote their graduation thesis in Norway in the summer of 2001. They calculated the optimal network arch in fig. 97. The resulting steel weights per m^2 of useful bridge area are shown on the left in fig. 98. The loads and codes of the EU were used. Where there was doubt, solutions that gave the bigger steel weight were adopted. A revised version of the students' graduation thesis can be found at http://home.uia.no/pert under the button "Masters Theses". Fig. 98 compares the steel weight of the network arch in fig. 97 to steel weights in recent German arch bridges with vertical hangers. The year that the bridges were built is indicated. Bridges marked N have no wind bracing. In bridges marked S the arches slope towards each other.

It is surprising that the network arch tends to use less reinforcement in the tie than the bridges that have steel beams under the concrete slab. Part of the reason for this is the high amount of minimum reinforcement that is needed in the slab that lies on top of the elongating longitudinal steel beams in the tie. In the optimal network arch the moderate longitudinal prestress in the serviceable limit state reduces the need for minimum reinforcement. Furthermore it seems to the author that when the concrete slab can carry the concentrated load, not much extra reinforcement is needed to take the load to the edge beams.

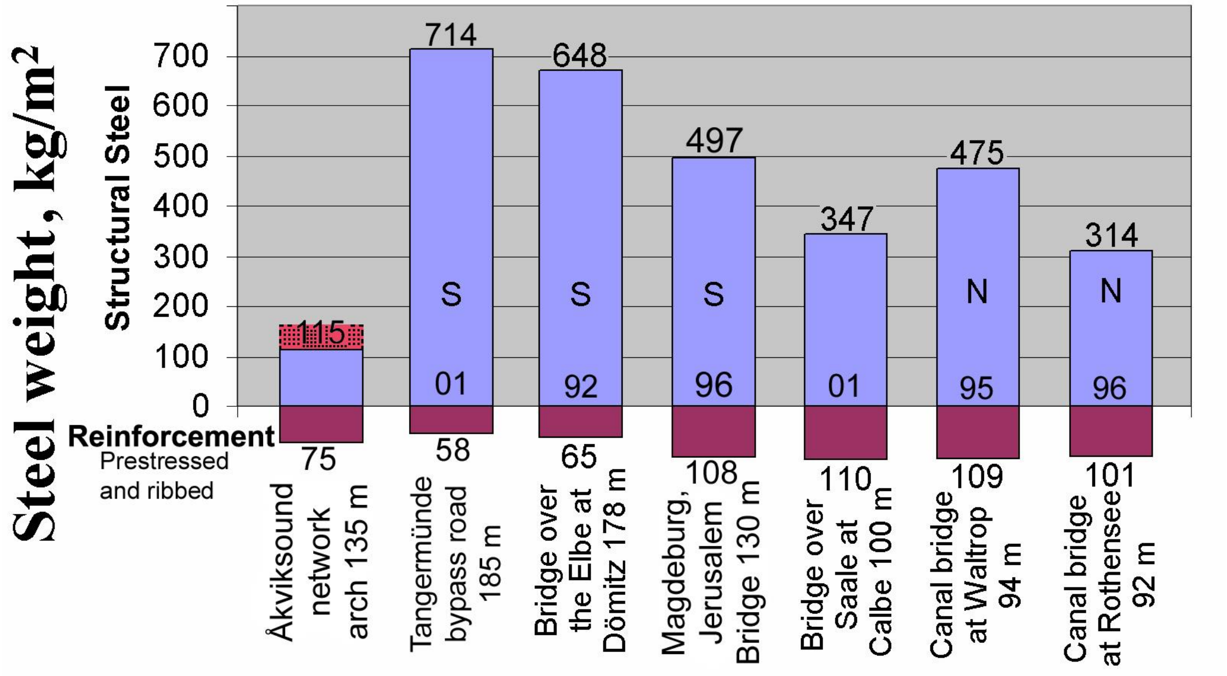

Fig. 98. Steel weight per square metre for various arch bridges

The Jerusalem Bridge in Magdeburg uses more than 4 times as much structural steel per m^2 as the Åkvik Sound Bridge. The spans are nearly the same. The Åkvik Sound Bridge comes out better because the area under the arches is included in the surface that is used for calculating the steel weight in kg/m^2. Different methods of erection contribute to the great variation in steel weight in fig. 98. A temporary tie for the Åkvik Sound Network arch would need a steel weight of ~45 kg/m^2.

In the Åkvik Sound Network arch pre-bent H-profiles made of S 460 are assumed. In 2003 the steel mill said that these profiles would cost between 22% and 30% more than straight profiles in grade S 355.

Steel weight is not the only thing that matters. The table in fig. 99 indicates other things that might be important. Among other things it gives reasons why the steel in network arches might cost less per ton than the steel in arch bridges with vertical hangers.

The references with the steel weights in fig. 98 can be found in Tveit 2002. Herzog 1975 says that arches use about the same amount of steel as other steel bridges. See fig. 9 p. 8. It indicates that network arches use much less steel than other road and rail bridges.

POINTS OF IMPORTANCE	**OTHER STEEL ARCH ROAD BRIDGES COMPARED TO OPTIMAL NETWORK ARCHES**
Aesthetics	Bulkier bridges
Adaptability	2 to 8 times deeper lower chords
Materials	2 to 4 times the steel weight
Fabrication	15 to 30 times longer welds. More complicated details
Corrosion protection	3 to 7 times more surface to protect
Maintenance	Other concrete parts need much more maintenance than concrete slabs with a slight prestress
Erection • Floating into place • Erection on side-spans • Erection on ice	Erection is more expensive with 2 to 4 times more steel.

Table 1 compares arch bridges with vertical hangers to optimal network arches

SAVING OF COST BY USING NETWORK ARCHES INSTEAD OF OTHER STEEL BRIDGES

In his work with network arches the author has presented influence lines and quantities to make it easy for fellow engineers to check his claims concerning savings of materials. An incomplete list of publications can be found on pp. 95 to 101.

Network arches have little welding and simple details that repeat themselves many times. The cost per tonne will be fairly low if efficient methods of erection can be found. The author has been reluctant to specify savings in US dollars or sterling because such savings are much more difficult to defend.

The reduction in cost resulting from the use of network arch bridges is of great interest. Therefore a network arch with a span of 150 m is compared to an arch bridge with vertical hangers spanning 100 m built over the river Saale near Calbe in Germany, Fiedler and Ziemann 1997. See fig. 98a, next page.

At similar sites network arches should normally have longer spans than other bridge types. This is because the steel weight of the network arch is smaller and it increases more slowly with increasing spans. This is an extra advantage if the size of the pillar depends mainly on the forces due to collision with ships or forces from breaking of ice in the spring.

The data for the network arch are based on the network arch designed by Teich and Wendelin 2001. See fig. 97 p. 93. A revised version of their work can be found on the author's home page, http://home.uia.no/pert under the button "Master's Theses".

The cost per m^2 of bridge between the railings is compared. The average width between the railings is 13.9 m for the Calbe Bridge and 14.8 m for the network arch. Both bridges are assumed to have many equal spans.

It is shown that the network arch with a span of 150 m will need about the same size of supports as the 100 m arch bridge with vertical hangers. The loads and codes of the EU are used for both spans. Factors that influence the cost of the two spans are presented.

58 % of the structural steel is saved. 34 % of the reinforcement is saved. 24 % of the concrete is saved.

The pillars are the same for both bridges. Less weight needs to be moved during erection

The saving on cost is probably 35 to 45% per m^2 of useful bridge area.

Fig. 98a. Comparison between the Calbe Bridge and a network arch.

Permanent load per span:	Calbe		Network arch
Structural steel	530 t	$255.1\,(150/135)^2=$	315 t
Railings 200kg/m	20 t		30 t
Reinforcement	151 t	126.2 (150/135) =	140 t
Concrete	1463 t	1358 (150/135) =	1509 t
Asphalt,etc. 80mm	136 t		197 t
	2300 t		2191 t

Live load on a support:

Calbe, area: 1390 m^2 :((9.0-2.5)·3·100+ 1390·2.5)0.981/10= 532 t
Network arch: 2205 m^2 :((9.0-2.5)·3·100+ 2205·2.5)0.981/10= 828 t

The load on a support due to concentrated live load is about the same for both bridges.

The live load on each support is added to the permanent load on the support after it has been multiplied by the relevant partial safety factors γ_Q/γ_G:

Calbe: 2300+532(1.5/1.35)=2891 t Network arch: 2191+828(1.5/1.35)=3111 t

Area exposed to wind:

	Arches and tie	Hangers	Railings	Traffic	
Calbe:	(0.9·2+2)100	0.12·207[m]	1·100	2·100	Σ 701 m^2
Network arch:	(0.424·2+0.6)150	0.06·1528[m]	1·150	2·150	Σ 759 m^2

The vertical load on the support is about 7 % smaller for the Calbe Bridge.
The area exposed to wind is approximately 8% smaller for the Calbe Bridge.
The useful area of the bridge is approximately 6 % smaller for the Calbe Bridge.

Since the span of the Calbe Bridge is 33 % smaller, the saving in the pillars when using the network arch is likely to be between 25 % and 32%.

Comparison of the superstructure of the Calbe Bridge with a span of 100 m and a useful area of 1390 m^2 to a network arch with a span of 150 m and a useful area of 2205 m^2.

	Calbe	Network arch	Reduction per m^2 of useful bridge area
Structural steel	530 t	315 t	63 %
Reinforcement bars	151 t	140 t	42 %
Concrete	1463 t	1509 t	35 %
Weight of steel skeleton during erection	530 t	~400 t	24 %

All comparisons will be lopsided. These additional facts should be taken into consideration:

The network arch makes better use of high strength steels. The yield strength of the steel in the Calbe Bridge is 345 MPa compared with 430 MPa in the network arch. The network arch has simpler details and much shorter welds. See fig. 99 page 93a, for comparisons between network arches and arch bridges with vertical hangers.

The rise of the arch is 17 % of the span in the Calbe Bridge and only 15 % of the span in the network arch. In the network arch the arch and the hangers protrude from the bridge area making the bridge area less useful. This is partly compensated for by widening the network arches up to 1.2 m at the end of the span. This widening is not included in the useful bridge area mentioned above.

The author thinks that using the network arch can save between 40 % and 50 % of the cost of the superstructure. The author also thinks that using the network arch instead of the arch with vertical hangers can save between 35 % and 45 % of the cost per m². Many good civil engineers will not believe that these savings are possible. Nevertheless the author hopes that most of them will consider trying network arches at suitable sites. If anybody makes a careful comparison of the cost of an optimal network arch bridge spanning more than 100 m with other types of bridges, the author would like to know the results.

THE BRANDANGER BRIDGE IS THE WORLD’S MOST SLENDER ARCH BRIDGE

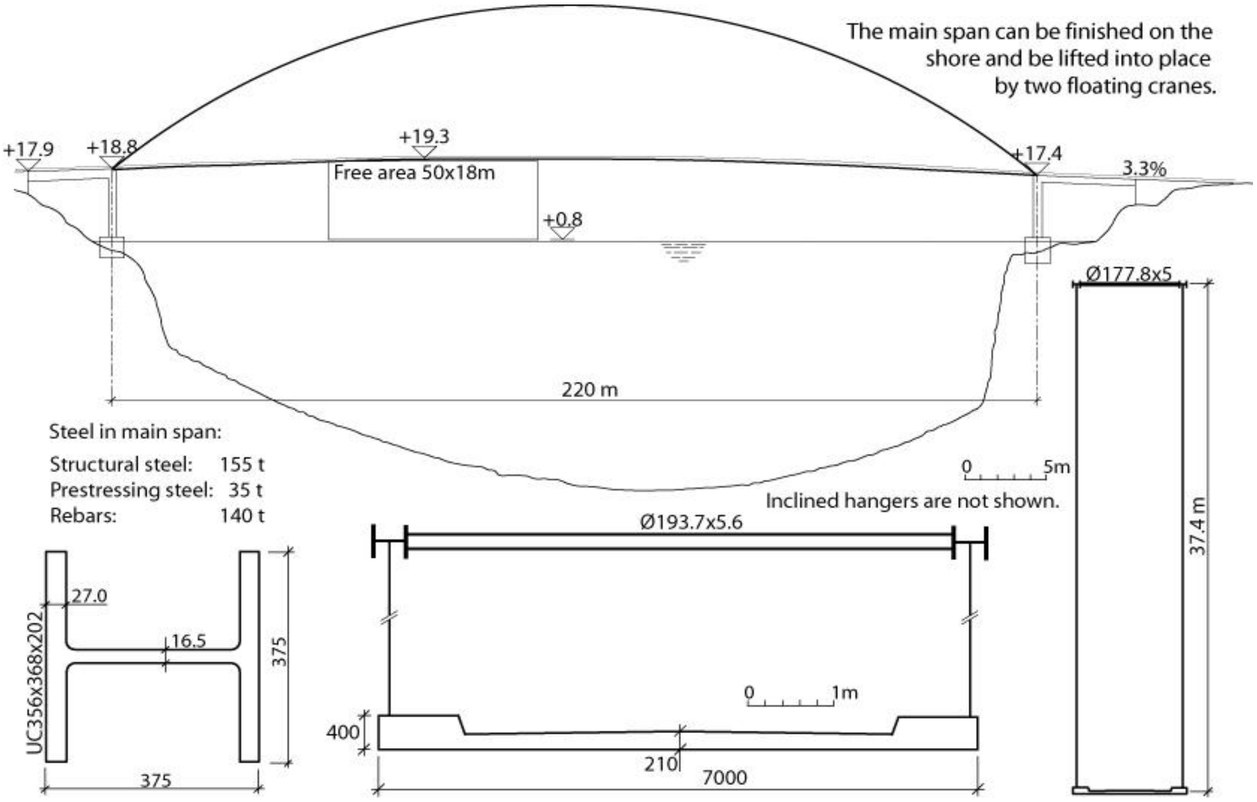

The main span can be finished on the shore and be lifted into place by two floating cranes.

Steel in main span:

Structural steel: 155 t
Prestressing steel: 35 t
Rebars: 140 t

Inclined hangers are not shown.

Fig. 99. An early drawing of a suggested Brandanger Bridge in western Norway

In 2003 Aril Hanekamhaug asked the author if he thought that a network arch would be suitable for the Brandanger Sound in western Norway. The span had to be around 220m and the traffic asked for only one lane. The author was sceptical at first. He was afraid that there would be dangerous vibrations, but he soon found that this would not be the case. Fig. 99 shows one of his first drawings of the bridge.

In the spring of 2004 two students from TU-Dresden did their Master's thesis on the Brandanger Bridge. They decided against the one lane alternative. Then they went back to Dresden and designed a two lane alternative which won a prize from the local building industry. Dr. Jan Teigen of the bridge department of the Norwegian public roads administration presented preliminary calculations of the Brandanger Bridge in November of 2004

Another student from Germany, Monica Stacka, was in Grimstad, Norway in the autumn of 2006 to do her Master's thesis on the Brandanger Bridge. Her work was continued by Susanne Matthes in 2008. Monica Stacka has now got a job in the Bridge Department of the Norwegian Public Road Administration. She has checked the calculations of the final design of the Brandanger Bridge done by the firm Aas-Jacobsen. (Larsen and Jakobsen 2011). See fig. 100.

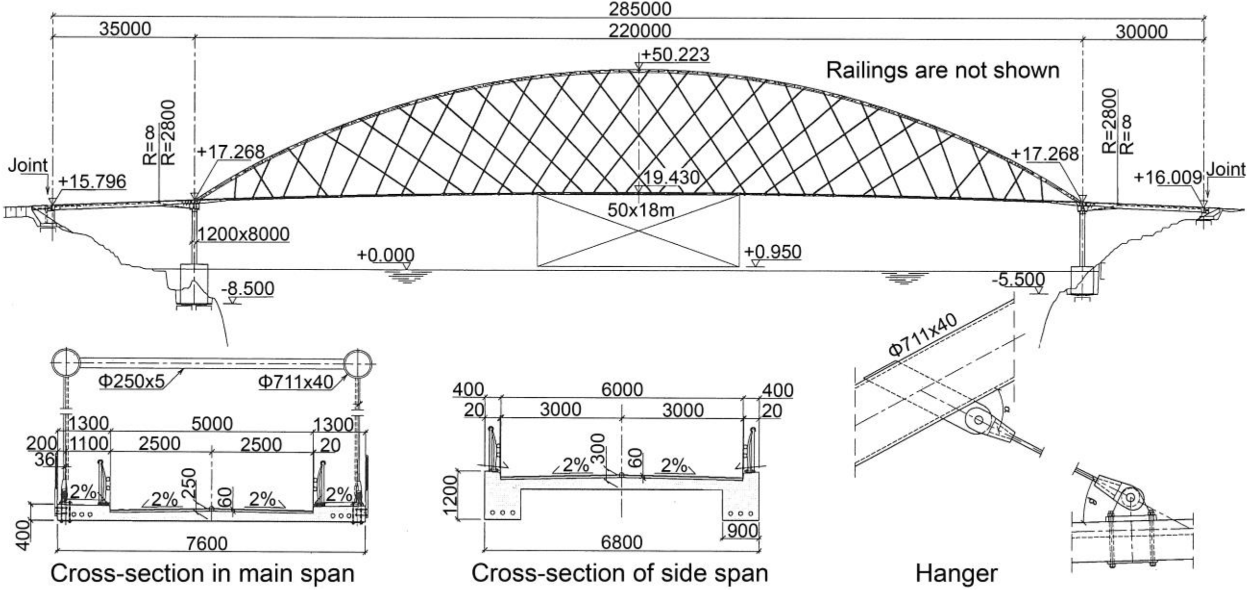

Fig. 100. Final design of the Brandanger Bridge

In the final design of the Brandanger Bridge the arch was made of steel tubes with an outside diameter of 711 mm. The maximum distance between the arch and the tie has been reduced to 14% of the span. A straighter lane made the side spans longer. Aas-Jacobsen was reluctant to pay attention to the author's suggestions. The hanger arrangement at the end of the span looks strange to the trained eye. Luckily the hangers are so slender that this is not very disturbing when you look at the bridge from a distance. See Fig. 101. The added thickness of the lane was not necessary.

The main span was made continuous with the side spans. The author would have liked the main span to be simply supported by the type of bearings shown in fig. 6b and fig. 18. This would have been a cost saving simplification. Out of interest Professor Philippe Van Bogaert of the University in Gent calculated wind effects on the main span of the Brandanger Bridge. He found that a simply supported main span could withstand the wind forces, but then the tie would have to be strengthened. By this time it was too late to alter Aas-Jacobsen's design.

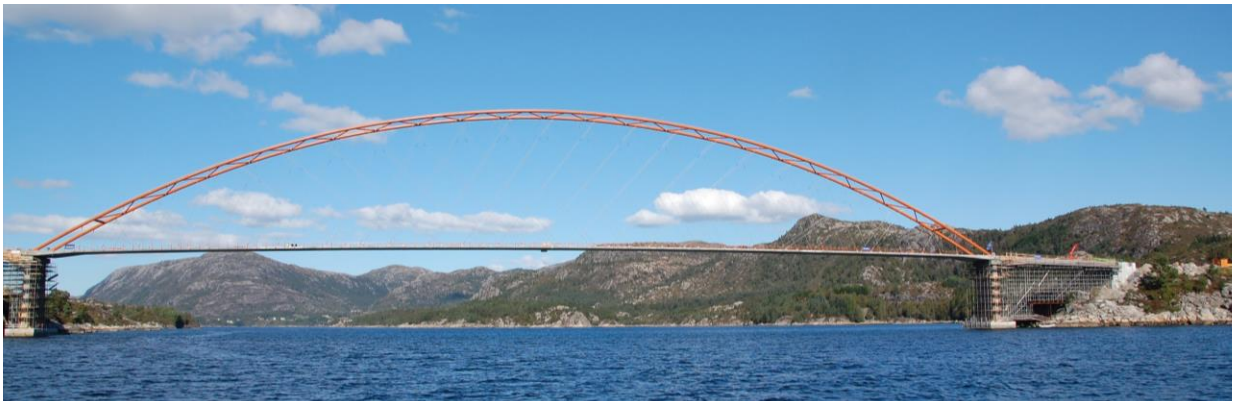

Fig. 101. The Brandanger Sound Bridge was lifted onto the pillars on the 7th of September 2010

Fig. 102. Stage in the building of the main span.

Fig. 103. Brandanger Bridge. Transport of the main span.

The firm Skaanska did a good job building the Brandanger Bridge. The main span was built on a flat area where rock had been taken out for covering pipelines in the North Sea. Fig. 102 shows a stage in the erection of the arch. Fig. 103 shows how the main span was transported 5 km to the bridge site by two big Dutch floating cranes that could lift ~1200 each. The span weighed 1860t.

The Brandanger Bridge is the world's most slender arch bridge and likely to remain so for a long time. This is because it is unlikely that anybody will build a bridge with a span of over 200m when the traffic does not need more than one lane. If they do, the steel in the arch will probably be more spread out than on the Brandanger Bridge.

CONCRETE NETWORK ARCHES WHERE MANY EQUAL SPANS ARE NEEDED

Now towards the end the author would like to present some ideas on the design of all concrete side spans for the Fehmarn Belt between Germany and Denmark.

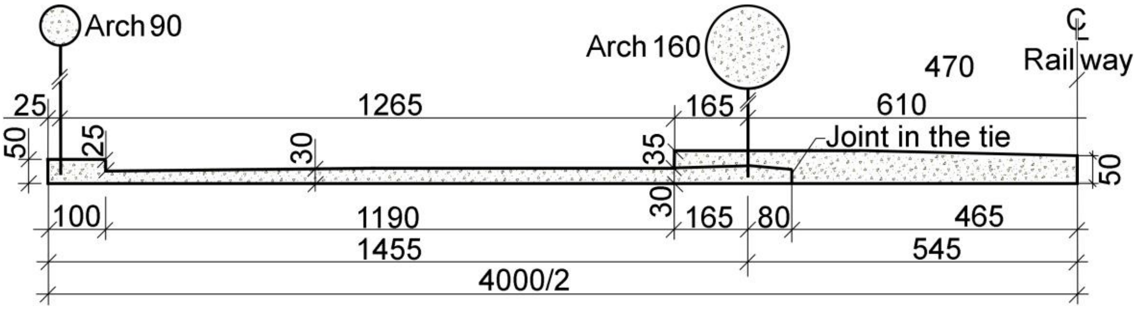

Figure 104. Cross-section of concrete side spans for a bridge over the Fehmarn Belt

Where many equal spans are needed over navigable water, the spans can be made on land to be lifted onto the pillars by big floating cranes. The cross-section in fig. 104 is for a side span of 235 m for the Fehmarn Belt Bridge between Germany and Denmark. 16 km of side spans are needed. A concrete quality with a cylinder strength of f_{cc}= 85 MPa is suggested.

Two arches with the road in one direction would be produced on shore. Those spans weigh ~5500 t. Seagoing cranes that could lift such spans exist. The concrete slab under the railway will be cast over the water.

The concrete bridge will not be used for the Fehmarn Belt Bridge, but it will be interesting to compare it to a steel alternative that has been designed. Preliminary investigations indicate the concrete alternative is slightly less costly than the steel alternative, but it would be more complicated to change the traffic between lanes and tracks in the concrete alternative.

Since there is little bending in the arches, they can be made of prefabricated elements. The wind portals would be cast in situ. The concrete spans would be slightly heavier than the steel alternative, but they would be subject to much less wind. Concrete in compression and concrete slabs with a slight prestress would have small maintenance costs. Professor Marx of TU-Dresden and two of his students, Marcus Krug and Steffen Müller have done interesting work and extensive calculations on the project.

HOW TO MAKE A PRELIMINARY DESIGN OF A NETWORK ARCH FOR A ROAD BRIDGE

This chapter has been moved to on the author's home page, home.uia.no/pert under the button "Supplementary Information." There the title is: "Preliminary design." There is simple advice on how to find dimensions for a suggested network arch. The purpose of such calculations is to arrive at the preliminary dimensions that can be put into a general frame program. The "Supplementary Information" will also be a good help to anyone who wants to find the amount of materials needed in a network arch. The spans are 93, 120, 135 and 160 m.

ACKNOWLEDGEMENTS

The author would like to express his heartfelt thanks to everyone that has encouraged and supported his work with network arches over the years. The list would fill several pages. Nobody mentioned, nobody forgotten.

In connection with this publication the author would like to give his most sincere thanks to those who arranged to let him lecture on network arches in February and March of 2000. Their names are found on the last page of this publication. The author would also like to thank Dr. Chris Grigson for help with the English language, and Dr. Bjørn Åkeson of Chalmers University in Gothenburg for many valuable suggestions on an early draft of part of this publication.

Thanks go to Associate Professor Marjorie Lorvik for proofreading the manuscript. The author would also like to thank his wife for her never-ending patience with his work on network arches and for correcting spelling and grammar. Without her help this publication would not have been made.

CONTRIBUTORS TO CORRECTIONS TO AND SUGGESTIONS FOR THIS PUBLICATION

Professor Dr. Günter Ramberger, TU Wien,	Professor Erik Hjorth-Hansen, NTNU Trondheim
Professor Semih S. Tezcan, Bogazici University, Istanbul,	Chartered Engineer Øyvind Arntsen, Oslo
Professor Dr. Kolbein Bell, NTNU Trondheim	Tekn. Dr. Lennart Fransson, Luleå Technical University
Tekn. Dr. Frank Axhag, Swedish Railways, Borlänge,	Professor Niels J Gimsimg, NHT, Copenhagen
Professor Dr. Tore H. Søreide, Reinertsen, Trondheim	Professor Dr. Wolfgang Graβe, TU-Dresden
Professor Dr. Ph. Van Bogaert, Universiteit Gent	Dr. Ladislav Šašek, Mott MacDonald, Praha
Professor Dr. Frank Schanack, UACh, Valdiva, Chile	Civil Engineer Eduardo Hennings Marianyi, Lima
Professor Dr. Steffen Marx, TU-Dresden	Dr. Theodore Zoli, HNTB Corporation, NY, USA

RECOMMENDED STUDENTS:

Nine students of Professor Dr. Habil Wolfgang Graβe of TU-Dresden have written their Master's theses with me in Grimstad. Their grade average has been extremely good. Most of their Master's theses can be found on my homepage http://home.uia.no/pert/ These students' work has been an inspiration to me. Their names are: Stephan Teich, Stefan Wendelin, Uwe Steimann, Benjamin Brunn, Mathias Rack, Frank Schanack, Tobias Rohm, Torsten Skalda, Monika Stacha, Susanne Matthes, Marcus Krug and Steffen Müller. The three last students did not do their master thesis, but their work extended the knowledge on network arches.

After the author had retired, he had help with computer tasks from some very clever students. They are: Joakim Hjertås, Dag Øyvind Godfredsen, Karl Syvert Løland, Thomas Hansen Gøytil, Per Steinar Karlsen, Are Loftesnes and Øyvind Storhaug. He strongly recommends them to any future employers. More information can be obtained by ringing the author at +47 3723 3236 or any phone number that he may have in the future.

LITERATURE

This list also contains references relevant to network arches not mentioned in this publication.

Andersen, G. (1979) "Brugerveiledning for FEMOPT. Program for optimering af bærende konstruksjoner." ("Users' manual for FEMOPT. Program for the optimising of load carrying-structures," in Danish.) Note no. 7902, Inst. Bldg. Tech. Struct. Engrg., Aalborg Univ. Centre, Aalborg, Denmark. 101 pages.

Backer, H., Pauw, B., Corte, W. and Bogaert, P. (2004) "Force Variation and Slackness in Tied Arch Bridges with Crossing Hangers." Arch Bridges IV, Barcelona, Nov. 2004. Advances in Assessment, Structural Design and Construction. P. Roca and C. Molins (Eds.). pp. 651-660. ISBN: 84-95999-63-3

Bast (2008)"Leitfaden zum Anhang II-H, Hänger von Stabbogenbrücken, des DIN-Fachberichtes 1003 (Ausgabe 2008) Schwihgungsanfällige Zugglieder im Brückenbau. Empfelungen für ermüdunggerechtes Konstruiren." (Guidance to attachment II-H. Instructions on hangers for tied arch bridges for DIN-Fachberechtes. Vibration inclined hangers in bridgebuilding. Recommendations for design against fatigue.) 74 pages.

Berger, O. (1955) "Beurteilung des Tragvermögens einer Großen Eisenbahnbrücke auf Grund von Spannungsmessungen und Berechnung als hochgradig (38 fach) statisch unbestimmtes System". (Evaluating the Load Carrying Capacity of a Big Railway Bridge and Calculating it as a Highly (38 times) Indeterminate System. In German.). pp: 526 - 535Bauplanung – Bautechnik H. 12 Des.1955. ISBN: 624.21 : 625. 183.3

Beyer, K. (1933) "Die Statik im Eisenbetonbau". (The Static in Concrete Structures. In German.) First volume, third printing.

Brekke, G. (2005) "Nettverksboge i Ytre Sogn" (Network arch in outer Sogn. In Norwegian) Vegen og Vi. Oslo, No.18, November 17th 2005. p. 21

Bittner, E. (1965) "Platten und Behalter." Springer-Verlag, Vienna – New York , 1965.

Bretting, A. E. (1935). "Inclined Hangers Impart Slenderness to Ribs of 470-Ft. Concrete Arch". Engineering News-Record. April 25, 1935. pp. 577-580.

Bretting, A. E. (1936). "Über Bogenträger mit schräg gestellten Hangestängen." ("On arches with inclined hangers," in German.) Internat. Vereiniung für Brückenbau und Hochbau. Zweiter Kongress, Schlussbericht 1936. pp. 514-515.

Brunn, B. and Schanack, F. (2003) "Calculation of a double track railway network arch bridge applying the European standards" Graduation thesis at TU-Dresden. August 2003. 320 pages. A revised version of this thesis can be found at http://home.uia.no/pert under the button "Masters Theses".

Brunn, B., Schanack, F. and Steimann, U. (2004) "Network arches for railway bridges" Arch Bridges IV, Barcelona, Nov. 2004. Advances in Assessment, Structural Design and Construction. P. Roca and C. Molins (Eds.). pp. 671-680. ISBN: 84-95999-63-3

Cederwall, K. & Fransson, L. (1979) "Förstärkning av ett istäckes bärförmåga med armering." (Strengthening of Sheets of Ice by Reinforcement." In Swedish.) Publ. 79:1 från avd før Konstrutionsteknik, Högskolan i Luleå. (Publ 79 from Department of Structural Design, Högskolan i Luleå).

Chan M. and Romanes M. (2008) "New Zealand's First Network Arch Bridge" Conference paper for the 4th New Zealand Metal Industry Conference, hosted by HERA in October 2008. All conference papers were published into a CD.

Cronholm (1963) "Die Versteiften Stabbogebrücken in Schweden" Acier, Januar 1963. P. 6/8.

Eurocode 3: Design of steel structures – Part 2: Steel bridges. ENV 1993-2. CEN, Central Secretariat: rue de Stassart, 36, B-1050 Brussels. Ref. No.ENV 11993-2: 1997E.

Fiedler, E. and Ziemann, J. (1997), "Die Bogenbrücke über die Saale bei Calbe – eine Brücke mit besonderer Bogenform", (The Arch Bridge over the Saale River at Calbe – a Bridge with an Unusual Arch Shape. In German), Stahlbau, Vol. 66, No. 5, 1997, pp. 263-270, Dokumentation 1997, pp. 329-337, ISBN 3-927535-04-4.

Franciosi, V. (1958). “Ponto ad Arco con Implacato Sospenso.” (“Arch bridges with inclined hangers,” in Italian.), Milan, Editore Ulrico Hoepli. 93 pages.

Fries, C. And Hommel, D. (1990) “Great Belt Link – Tender design and contract design for the West Bridge.” Procedings of the 2nd Symposium on Strait Crossings. Trondheim/Norway/10-13 June 1990. Pulished by A:A: Balkema, Rotterdam. pp. 5-312. ISBN 90 6191 1184.

Fujiono, T. and Ohsaka, K. (1965) “Stress Analysis of Plane Frame Structure by Digital Computer.” In Japanese. November 1965. Mitsubishi Technical Bulletin MTB 010029. Mitsubishi Heavy Industries, Ltd. Tokyo, Japan. 10 pages.

Gauthier, P. and Krontal, L. (2010) “Erfahrungen mit Netzwerkbogenbrücken im Eisenbahnbrückenbau”. (“Experiences with Network Arches in Railway Bridges”. In German). Stahlbau H. 3. 2010 pp. 199-207.

Galambos, T. V. Ed. “Guide to Stability Design Criteria for Metal Structures” Fifth edition, 1998, John Wiley & Sons. ISBN 0-471-12742-6. Chapter 15 and 17.

Geißler, K., Steimann, U., Graße, W. (2008) “Netzwerkbogenbrücken – Entwurf, Bemessung, Ausfürung” (Network Arch Bridges – Design and Execution.) Stahlbau H. 3, 2008 pp. 159-171

Gerard, G. (1962) “Introduction to Structural Stability Theory” McGraw-Hill Book Company, Inc. 1962

Graβe, W. and Tveit, P. (2007) “Netzwerkbogenbrücken – Geschichte, Tragwerhalten und ausgeführte Beispiele“ (Network Arches – History, Function and Built Examples. In German.) 17. Dresdner Brückenbausymposium. 13. March 2007. ISSN 1613-1169, ISBN 3-86005-542-9. pp. 183-198.

Gimsing, N. (1999) “Bridge aesthetics and structural honesty.” Väg- och Vattenbyggaren, Stockholm, 2. 99. pp. 28-42.

Guinness Book of World Records (1995). Editor: Peter Matthews, Bantam Books, New York. Page 306.

Gut, H. and Shuwerk, O. (1971) “Die Brücken der SBB im Raume Ziegelbrücke-Weesen.” “The bridges of the SBB in the Ziegelbrûcke-Weesen aerea” Schweizerishe Bauzeitung, 1971, pp. 1017-1030.

Günter, G., Hortmanns, M., Schwartzkopf, D., Sedlacek, G. and Bohmann, D. ”Dauerhafte Ausfürung von Hängeranschlüssen an stahlerne Bogenbrücken”. (Durable Attachment of Hangers in Steel Arch Bridges.) Stahlbau 69 (2000) Heft 11, pp. 894 – 908.

Herzog, Max. (1975). “Stahlgewichte moderner Eisenbahn- und Straβenbrücken.” (Steel Weights of Modern Rail and Road Bridges.) Der Stahlbau 9/1975. pp. 280-282.

Hennings Marianyi, E. (2006). *Puente en Arco Tipo Network sobre el Río Carbón, Departamento Cusco, Peru*, <http://www.network-arch.com/download/hennings_calculo_carbon_2006.pdf> (March 12, 2007), Lima, Peru

Hess, W. L. (1996). “An Alternate Hanger System for Tied Arch Bridges” 13th Annual International Bridge Conference in June 1996 in Pittsburgh, Pennsylvania.

Hiroshi, Y., Satake, M. and Korematsu, M. (1965) “Study of Nielsen System Bridges’.” In Japanese. March 1965, Mitsubishi Technical Buletin MTB 010021 Mitsubishi Heavy Industries, Ltd., Tokyo, Japan. 8 pages.

IABSE (2005) “Use and Application of High-Performance Steels for Steel Structures” ETH Hönggerberg CH-8093 Zürich. ISBN 3-85748-113-7. 152 pages.

Jay, A. (1998) “Network Arches” In French. Høgskolen i Agder, 4890 Grimstad, Norway. July 1998. 66 pages.

Kahman, R. and Beisel T. (1979) “Eine außergewöhnliche Montagemethode für die Bogenbrücke bei Straubing.” Der Stahlbau 1979. Heft 4. Berlin. pp. 110-115.

Kikuno, M. (1973) “Ohnura Bay Bridge (Japan).” Acier-Stahl Steel, 41(4) Brussels, Belgium, pp.168-171.

Kolm, R. (1950) “Bro över Lulefjärden.” (“Bridge over Lulefjärden,” in Swedish.) Svenska Vägföreningens Tidsskrift 1950. No. 7. 7 pages.

Krück, G. E. (1946) “Eisenbeton-Strassenbrücke über den Mänam Pasak bei Ayuthia, Siam.” (“Concrete road bridge over the Mänam Pasak at Ayutia, Siam,” in German.) Schweizerische Bauzeitung 1946. Vol. 127, pp. 139-146, Vol. 128, pp. 6-9, 15-19, 27-28.

Kungliga Väg- och vattenbygnadsstyrelsen. (1954) “Bro över Lulefjärden vid Luleå.” (“Bridge over Lulefjärden vid Luleå, in Swedish”) 76 pages.

Larsen, R.M. and Jakobsen, S.E. “Brandangersundet Bridge – A slender and light network arch” Taller, Longer, Ligher. IABSE-IASS-2011 London Symposium Report.

Leonhardt, (1991) “Developing guidelines for aesthetic design.” *Bridge aesthetics around the world*, M. P. Burke Jr. et al.,eds., Nat. Res. Counsil, Washington, D.C. pp. 32-57.

Majid, K.I., Spindel, J. E., Williams, M. S. (1971) “The Design of Inclined Tied Arch Railway Bridges over the M56. Paper 7392, Proceedings of the Institution of Civil Engineers. Vol. 50, Oct. 1971, pp. 139-160.

Maier-Leibnitz. (1941) “Grundsätzliches über Modellmessungen der Formänderungen und Spannungen von verankerten Hängebrücken.” (Fundamentals concerning measurements of stresses, strains and deflections on models of anchored suspension bridges.) Die Bautechnik, Heft 46/47, October 1941.

Moeen, S. et al. (2004) “Parametric Studies on Cable Supported Arch Bridges“ 9th International Conference on Current Trends in Aquaducts, Road, Rail and Marine Bridges. 22-24 December, 2004 Hyderabad , India. Vol. 2. pp. 281-289.

Nakai, H. et al. (1995) “Proposition of Methods for Checking the Ultimate Strength of Arch Ribs in Steel Nielsen-Lohse Bridges.” Stahlbau 64 (1995) Heft 5, pp.129-137.

Naruoka, M., Itoh, K., and Matsukawa, A. (1977) “Nielsen System Bridges in Japan.” Pfluger-Festschrift Hannover, Germany, 1977. pp. 193-202.

“National Steel Bridge Alliance. 2009 Prize Bridge Competition.” Modern steel Bridge construction. November 2009. p. 25-43

Nielsen, O. F. (1929) “Foranderlige Systemer med anvendelse på buer med skraatstillede Hængestenger.” (“Discontinuous systems used on arches with inclined hangers”, in Danish.) 121 pages. Gad Copenhagen. Ph.D. thesis.

Nielsen, O.F. (1932) “Bogenträger mit Schräg gestelten Hängestangen.” (“Arches with inclined hangers,” in German.) Internationale Vereiningung f. Brückenbau und Hochbau. Abhandlungen 1, 1932. pp. 355-363.

Nielsen, O. F. (1936) Same title and periodical as above. Abhandlungen 4, 1936, pp. 429-438.

Ostenfeld, C. (1976) “Christiani & Nielsen, Jernbetonens danske pionerer” (“Christiani & Nielsen, The Danish Pioneers of Reinforced Concrete,” In Danish.) Polyteknisk Forlag, Lyngby, Denmark. 245 pages.

Pelegrino, C.,Cupiani, G. and Modena, C. (2010) “The Effect of Fatigue on the Arrangement of Hangers in Tied Arch Bridges” Engineering Structures (2010) doi:10.1016/j.engstruct.2009.12.040

Petrescu, I. & Popa, N (1999) Comparative Study of a bowstring arch bridge stability with various types of wind bracings. Stahlbau H2, 1999.

Pucher, A. (1977) “Einflussfelder elastischer Platten. – Influence Surfaces of Elastic Plates.” Springer-Verlag Wien New York. Fifth revised edition. (Any edition of this book will do.)

Räck, M. (2003) “Entwurf einer kombinierten Straßen-Eisenbahn-Netzwerkbogen-brücke“ (Draft of a Network Arch for a Combined Road and Railway Bridge) Graduation thesis at TU-Dresden. August 2003. 237 pages. A revised version of this thesis can be found at http://home.uia.no/pert under the button “Masters Theses”.

Šašek, L. (2005). “Getting on the Network. Innovation in arch design” BRIDGE Design **§ E**ngineering. v. 11, no 40, pp. 39-40

Šašek, L. (2006). “Less is More“, Civil Engineering, The magazine of the American Society of Civil Engineers - ASCE, April 2006, pp. 50-55.

Schanack, F. (2007) “Diseño y Estructura de Arcos Tipo Network. Trabajo de Investigation“ Departemento de Ingenieria Estrutural y Mecánica, Escuela Técnica de Caminos, Canales y Puertos, Unoversitad de Cantabria, Santander, Espãnia, 85 pages.

Schanack, F. (2008) “Puentes en Arco Tipo Network“ (Network Arch Bridges.) Doctoral Thesis. Departemento de Ingenieria Estrutural y Mecánica, Escuela Técnica de Caminos, Canales y Puertos, Universitad de Cantabria, Santander, Espãnia, 2008. 370 pages.

Schanack, F. (2008) “Puentes en Arco Tipo Network“ (Network Arch Bridges.) Thesis Doctoral. Departemento de Ingenieria Estrutural y Mecánica, Escuela Técnica de Caminos, Canales y Puertos, Universitad de Cantabria, Santander, Espãnia, 2008. 246 pages. ISBN 978-84-89670-66-2

Schanack, F. and Brunn, B. (2009) „Analysis of the structural performance of network arch bridges.“ The Indian Concrete Concrete Journal. January 2009. pp. 7-13.

Schanack. F. (2009a) “Berechnung der Knicklast in Bogenebne von Netzwerkbögen” (Calculation of the Buckling Load in the Plane of the Arches in Network Arches.) Bautechnik, Heft 5, Ernst & Sohn, Berlin.

Schanack, F. and Brunn, B. (2009) “Netzgenerierung von Netzwerkbogenbrücken ” (Creation of Nets of Hangers in Network Arches.) Stahlbau, Heft 7 2009, Ernst & Sohn, Berlin.

Schlaich J., Fackler T., Weißbach M., Schmitt V., Ommert C., Marx S., Krontal L. (2008) “Leitfaden Gestalten von Eisenbahnbrücken” Fischer Druck GMBH, Peine

Shorning, W. (2000) “Mainbrücke an der NATO-Rampe zwischen den Gemarkungen Sulzbach Und Niedernberg.” Stahlbau 2000, H5. pp. 387-390.

Snelling, J. (1980) “Two unusual features of the Merivale Rail Bridge.” Presented at the 11th IABSE Congress, held in Vienna, Austria, Final Rep., IABSE, ETH-Hönggerberg, CH-8039, Switzerland, pp. 347-349.

Steimann, U. (2002) “Berechnung und Konstruktion einer stählernen Eisenbahn-Stabbogenbrücke mit Netzwerkhängern“ (Calculation and Design of Network Arch Railway Bridge of Steel. In German.) Graduation thesis at TU-Dresden. September 2002. 270 pages. A revised version of this thesis can be found at http://home.uia.no/pert under the button “Masters Theses”.

Stein, Philipp. (1951) “100 Jahre GHH-Brückenbau.” (“100 Years of GHH Bridge Building”) Publisher: Gutehoffnungshütte Aktiengesellschaft, Oberhausen.

Stein, Peter and Wild, H. (1965). “Das Bogentragwerk der Fehmarnsundbrücke.” (“The arch of the Fehmarnsound Bridge” In German.). Der Stahlbau, 34(6) Berlin, B.R.D. pp. 71-186.

Steere, P. and Yihui, Wu. (2008). “Design and Construction of the Providence River Bridge” Official Proceedings of the 25th Annual International Bridge Conference, June 2-4, 2008.

Takagi, S. et al. (1970) “Report of Experimental Research on Aki-Ohashi. (Nielsen System Lohse Girder Bridge).” In Japanese. Transactions of JSCE, Vol. 2, Part 1, 1970. pp. 104-110.

Teich, S. and Wendelin, S. (2001) „Vergleichsrechnung einer Netzwerkbogenbrücke unter Einsats des Europäishen Normenkonsepts.“ (In German). Graduation thesis at TU-Dresden. August 2001. 300 pages. A revised version of this thesis can be found at http://home.uia.no/pert under the button “Masters Theses”.

Teich, S. (2004) “Fatigue Optimization in Network Arches Arch Bridges IV, Barcelona, Nov. 2004. Advances in Assessment, Structural Design and Construction. P. Roca and C. Molins (Eds.). pp. 691-700. ISBN: 84-95999-63-3.

Teich. S. (2012) “Beitrag zur Optimierung von Netzwerkbogenbrüken“ (Contrbution to Optimizing Network Arch Bridges). PhD. thesis. ISSN 1613-6934. The whole text can be found at http://www.qucosa.de/fileadmin/data/qucosa/documents/8604/Dissertation_Teich.pdf

Teich, S. and Graβe, W. (2004a) “Beitrag zur Optimierung von Hängeranschlüssen Stählerner Stabbogenbrücken” (“Contribution to the optimisation of ends of hangers in steel arch bridges” in German) Stahlbau, 2004, H. 12. pp. 1021-1030.

Tveit, P. (1955) Graduation thesis on arch bridges with inclined hangers. Delivered in September 1955. 76 pages. At the Technical University of Norway, Trondheim.

Tveit, P. (1959) “Bogebruer med skrå krysstilte hengestenger.” (“Arch bridges with inclined intersecting hangers,” in Norwegian.) Ph.D. thesis presented at the Tech. Univ. of Norway. 64 pages, 78 drawings.

Tveit, P. (1964) “Nettverkbogar, ein ny brutype”. (“Network Arches, a New Type of Bridge.) Bygg, Vol. 12, May 1964, pp.105-113.

Tveit, P. (1966) “Design of Network Arches.” Struct. Eng:, 44(7). London, England, pp. 247-259.

Tveit, P. (1972). Discussion to Majid (1971). Proceedings of the Institution of Civil Engineers. Vol.52. August 1972, pp.181-184.

Tveit, P. (1973) “Network arch in double track railway bridge.” Presented at Nordic Research. Days for Steel Struct., held in Oslo, Norway, Pre-print V713. (The publication is much the same as: “Report 7205.” Ren og Anvendt Mekanik, Danmarks Ingeniørakademi, Bygningsafdelingen, Aalborg, Denmark. 35 pages.)

Tveit, P. et al. (1978) “Network arches.” 1st ed., Civil Engineering. Department., Univ. of Houston June 26 1978. 93 pages. Revised edition reprinted at inst. of Bldg. Techn. Struct. Engrg., Aalborg Univ. Centre Aalborg, Denmark, 1980. ISSN 0105-8185 NOTE NO. 8007. Including handout for the Poster Session of IABSE’s 11. Congress, Vienna, September 1980. 45 pages.

Tveit, P. (1980a) “Network arches.” Handout for poster session of IABSE’s 11th Congress, held at Vienna, Publ. by inst. Tech. Struct. Engineering., Aalborg Univ. Centre, Aalborg, Denmark. 45 pages.

Tveit, P. (1980b) “Network Arches.” 11th IABSE Congress, held in Vienna, Austria, *Final Report*, IABSE, ETH-Hönggerberg, CH-8039, Zürich, Switzerland, pp. 817-818.

Tveit, P. (1981) “25 år med nettverkbogar. Resultat og perspektiv.” (“25 years with network arches. Results and perspectives,” in Norwegian.) Guest lect. at Tech. Univ. of Norway, printed at Inst. of Bldg, Tech. Struct. Engineering., Aalborg University. Aalborg, Denmark. 40 pages. IFB/A 8101.

Tveit, P. (1983) “Economic design of network arches.” Rep. No. 8304, Inst. of Bldg. Tech. Strict. Enter., Aalborg Univ. Centre, Aalborg, Denmark, 22 pages. ISSN 0105-7421 Report no, 8304.

Tveit, P. (1984) “Economic design of network arches” Handout for the poster session of IABSE’s 12th congress, Vancouver, September 1984. Published by Inst. Bldg. Tech. Struct. Engineering., Alborg Univ. Centre, Aalborg. 32 pages. ISSN 0105-7321 R8405.

Tveit, P. (1984a) “A network arch with four sets of hangers designed to be cast and erected on ice floating between piers.” Handout for the poster session of IABSE’s 12th Congress, held at Vancouver, Canada. Publ. by Inst. of Bldg. Tech. Struct. Engineering., Alborg Univ. Centre, Aalborg, Denmark. 106 pages.

Tveit, P. (1984b) “Building network arches on reinforced ice between piers.” *Final Rep*., IABSE’s 12th Congress, held at Vancouver, Canada, publ. by IABSE, ETH-Hönggerberg, CH-8039, Zürich, Switzerland, p.1130.

Tveit, P. (1987) “Considerations for the Design of Network Arches.” Journal of Structural Engineering, Vol. 1113, No.10, October, 1987. ©ASCE, ISSN 0733-9445/87/0010-21897 Paper No. 21892. pp. 2189-2207.

Tveit, P. (1992) “Network Arches in Perspective” Guest Lecture held at the technical Universities in Prague and Vienna, March 1986. Published by Agder College of Engineering, Norway. Report 2/92 ISSN 0801-6313, 36 pages.

Tveit, P. (1996) “Wie konstruiert man die schlankste und leichteste Bogenbrücke der Welt - Ein Vortrag Über Netzwerkbögen.” (“How to design the lightest and most slender arch bridge in the world. A lecture on network arches.” In German.) © Høgskolen i Agder, 1995. Publication series no. 2. ISSN: 0806-5942. ISBN: 82-7117-301-4. 24 pages.

Tveit, P. (1999a) Comparison of Steel Weights in Narrow Arch Bridges with Medium Spans. A Note on the Optimal Design of Network Arches. Published by Agder University College. Publication Series No. 47. 8 pages. ISSN: 0806-5942 ISBN: 82-7117-378-2.

Tveit, P. (1999b) Netværksbuer – en interessant brotype. Foredrag i København , Gøteborg og NTNU. March 1999. (Network arches – an interesting type of bridge. Lectures in Copenhagen, Gothenburg and NTNU. March 1999). Published by Agder University College 1999. 30 pages. ISSN: 0806-5942, ISSN: 0806-5942, ISBN: 82-7117-394-4.

Tveit, P. (1999c) Comparison of Steel Weights in Narrow Arch Bridges with Medium Spans. Stahlbau 68 (1999), Heft 9, Berlin, pp. 753-757

Tveit, P. (2000) A bridge suitable for India? ICI journal, Indian Concrete Institute. Vol. 1, April – June 2000 no.1, pp. 7-10.

Tveit, P. (2000) The Network Arch - A bridge for China. Steel Construction. 2000.4. Vol. 15 No.50 ISSN 1007-9963 CN 11-3899/TF. pp. 57-59

Tveit, P. (2001) “How, Why and Where for the Network Arch, the World’s Most Slender Arch Bridge.” Contribution to ARCH’01. Third international arch bridge conference. pp. 161-167. ISBN 2-85978-347-4.

Tveit, P. (2002) “Optimal design of network arches”. Contribution to the IABSE Symposium in Melbourne 2002. 13 pages. ISBN 3-85748-107-2

Tveit, P. (2003) “Erection of Optimal Network Arches” Contribution to 8th International Conference on Innovation and Planning, Design and Construction Techniques in Bridge Engineering.” Organised by: Indian Institution of Bridge Engineers. 26-27 April, 2003. Hyderabad, India. Vol.1 pp. 1-27

Tveit, P. (2003b) “Competitive Design of Network Arches”. In: Structural Research. Anniversary volume honouring Péter Lenkei. Bársony, J. Ed. Pollack Mihály Faculty of Engineering. Pécs University, Hungary. pp. 225-233.

Tveit, P. (2004) “Introducing the Optimal Network Arch.” Bridges in the Danube Basin. Procedings of the 5th International Conference on Bridges across the Danube 2004. Novi Sad/Serbia & Montenegro/ 24 – 26 June 2004. Bratislav Stipanic. Ed. Pub. by Euro Gardi Group, Rumenacka 17, Novi Sad. pp. 257-266

Tveit, P. (2004a) “Reduce Costs by Building Optimal Network Arches” Keynote lecture at Arch Bridges IV, Barcelona, Nov. 2004. Advances in Assessment, Structural Design and Construction. P. Roca and C. Molins (Eds.). pp. 26-37. ISBN: 84-95999-63-3

Tveit, P. (2004b) “Network arches for road bridges.” Co-authors: Wolfgang Graβe, Stephan Teich, Stephan Wendelin. Arch Bridges IV, Barcelona, Nov. 2004. Advances in Assessment, Structural Design and Construction. P. Roca and C. Molins (Eds.). pp. 681-690. ISBN: 84-95999-63-3

Tveit, P. (2004c) “Erection of network arches.” Co-authors: Mathias Räck, Frank Schanack. Arch Bridges IV, Barcelona, Nov. 2004. Advances in Assessment, Structural Design and Construction. P. Roca and C. Molins (Eds.). pp. 661-670. ISBN: 84-95999-63-3

Tveit, P. (2004d) “Optimal Network Arches for Rail and Road Bridges.” 9th International Conference on Current Trends in. Aqueducts, Road, Rail and Marine Bridges, 20-22 December 2004.– Hyderabad, India. Organised by: Indian Institution of Bridge Engineers. pp.185-195.

Tveit, P. (2005) “Optimal Network Arches Save 50 to 75 % of the Steel.” IABSE Conference New Delhi, India 2005. Role of Structural Engineers towards Reduction of Poverty. ISBN 3-85748-111-0. pp. 401-408

Tveit, P. (2005a).”Optimal Network Arches for Road and Rail Bridges.” 4th International Conference on New Dimensions in Bridges, Flyovers, Overpasses & Elevated Structures. “ 24 – 25 October, 2005, Fuzhou, China. ISBN: 981-05-3551-1. pp. 281-288.

Tveit, P. (2006) “Optimal Network Arches for Coastal Regions”. International conference on bridges, Dubrovnik, May 2006. pp. 721-728. ISBN953-95428-0-4

Tveit, P. (2006b) “Nettverkbroer, en effektiv kombinasjon av stål og betong”. (Network arches an efficient combination of steel and concrete. In Norwegian). Stålbygnad , Stockholm, No. 2. pp 33-35. ISSN 1404-9414

Tveit, P. (2007) “Visit to the Steinkjer network arch 44 years later”. ARCH’07, 5th International Conference on Arch Bridges. Madeira, 12-14 September 2007. pp. 305-314, © University of Minho. Portugal. ISBN: 978-972-8692-31-5

Tveit, P. (2007). “An Introduction to the Optimal Network Arch”. Structural Engineering International 2/2007, Journal of the International Association for Bridge and Structural Engineering (IABSE) pp.184-187. ISSN 1016-8664, E-ISSN 1683-0350

Tveit, P. (2008) “The Network Arch and How to Erect it”. Zabljak, Montenegro March 070308. ISBN 978-86-82707-14-1. pp. 361-368

Tveit, P. (2008a) “Concrete in the Optimal Network Arch”. Proceedings of The International *FIP* Symposium 2008, Amsterdam, The Netherlands, 19-21 May 2008. ISBN 978-0-415-47535-8. pp. 164

Tveit, P. (2008b) “About The Network Arch”. This is a lecture that IABSE has asked the author to give for a group of lectures that can be found at http://elearning-iabse/l20 Can also be found at the authors home page http://home.uia.no/pert under the button “My Publications”.

Tveit, P. (2008c) “India Needs Network Arches” National Seminar on “RECENT ADVANCES AND FUTURE TRENDS IN DESIGN AND CONSTRUCTION OF BRIDGES” 11-13 July, 2008 – Hyderabad, India. pp.29-46. Published By The Indian Institution of Bridge Engineers, 9, Gr. Fl. Greenfield CHS, Off Sitaladevi Tempel Road, Matim, Mumbai-400 016.Tveit, P. (2008) “Concrete in the optimal network arch”. Tailor Made Concrete Structures – Walraven & Steelhorst (eds) p.163 ISBN 978-0-415-47535-8

Tveit, P. (2008d) “The Network Arch” In the home page http://home.uia.no/pert under the button “The Network Arch”.

Tveit, P. (2009c) “ A Systematic Thesis on Network Arches” . Same home page as above.

Tveit, P. (2009a) “Efficient Utilisation of Optimal Network Arches”. Proceedings of the fifth Sumposium on Strait Crossings, Trondheim, Norway June 21-24, 2009. ISBN 978-82-92506-69-1 pp. 509-514.

Tveit, P. (2009b) “Genesis and Development of the Network Arch Concept” NSBA World steel Bridge Symposium. San Antonio, Texas. November 17-20, 2009.

Tveit, P. (2009) “India Needs Network Arches”. Civil Engineering & Construction Review. August 2009. pp. 50-60

Tveit, P. (2010) “Optimal Network Arches For Road and Rail Bridges” Proceedings of the 6th International Conference on Arch Bridges. Fuzhou, Fujian, China. October 11-13, 2010. pp. 271-278. ISBN 978-953-7621-10-0.

Tveit, P. and Pipinato, A. University of Padoa (2011) Il progretto di Ponti di tipo network-arch. (The network-arch bridge design in Italian) Costruzione Matalliche. Mar/Apr 2011, Pp 47-56. ISSN nº 0010-9673.

Tveit, P. (2014) “The Network Arch. Bits of Manuscript in March 2014 after Lectures in 50 Countries.” Can be found at http://home.uia.no/pert/ under the button “The Network Arch”. Will be updated as long as the author is active.

Union International des Chemins de Fer. (1974) Loading diagram to be taken into consideration for the calculation of rail-carrying structures on lines used by international services. UIC code – 702V, 2. ed. 1974.

Vejdirektoratet (1974) (Directorate of Highways) Beregnings- og belastningsforskrifter for vejbroer. (Rules for Calculations and Loads for Road Bridges.) May 1974, Copenhagen, Denmark.

Wollmann, G., Zoli, T. and Shook, J. (2005) “Design of Tied Arch Bridge Across Ohio River and Blennerhassett Island” Proceedings, 22nd Annual International Bridge Conference, Pittsburgh, PA, June 13-15.

Wollmann G, et al. (2007) “Construction of Tied Arch Bridge Across Ohio River and Blennerhassett Island” Proceedings, 24th Annual International Bridge Conference, Pitsburgh, Pennsylvania, June 4-6

Wollmann, G. and Zoli, T. (2008) “Bridge Across Ohio River and Blennerhassett Island” Structural Engineering International 1/2008., Number 1, February 2008. pp. 28-30.

Yoshikava, O. et al. (1993) “Construction of the Shinamadera Bridge” Stahlbau 63 (1993), Heft 5, pp.125-136.

Zoli, T. and Woodward, R. (2005) “Design of Long Span Bridges for Cable Loss.” IABSE Symposium, Structures and Extreme Events, September 14-17, Lisbon, Portugal.

Zoli, T. and Steinhouse, J. “Some Considerations in the Design of Long Span Bridges against Progressive Collapse.” 23nd US- Japan Bridge Engineering Workshop (11/2007). http://www.pwri.go.jp/eng/ujnr/tc/g/pdf/23/23-2zoli.pdf

Żółtowski, K. (2005) “Bogenbrücke über den Fluβ in Wolin – Entwurf und Realisierung.” Stahlbau 2005, Heft 9, pp. 685-690.

Zwingmann. B., Schanack, F. and Marx. S. (2009) “Asymetrische Netzwerkbogenbrücken”. (Asymetric Network Arches.) Stahlbau 2009 Heft 7. pp. 471-476.

ORGANISERS OF LECTURES ON NETWORK ARCH BRIDGES IN FEBRUARY AND MARCH 2000.

Before the tour Professor Ramberger of TU-Wien rcommended the author's lectures to all colleagues on the strength of a lecture that the author had given in Vienna in 1986.

Institution	Principal contact
Delft University of Technology.	Dr. ir. A. Romeijn
Universiteit Gent	Professor Dr. Ph. Van Bogaert
Bundesanstalt für Straßenwesen Brüderstraße 53, Bergisch Gladbach	Director und Prof. Dr.-Ing. Fritz Großmann
Technische Universität Braunschweig	Prof. Dr. Udo Peil, Dr. Thomas Ummenhofer Dr. Reininghausen
Universität Stuttgart	Prof. Dr.-Ing., Drs. h.c. Jörg Schlaich, Dr.-ing. Karl-Heinz Reineck
Technische Universität München	Prof. Dr. -Ing. Gert Albrecht
Ecole Polytechnique Federale de Lausanne	Prof. dr. ing.. Manfred A. Hirt
University of Pisa	Prof. Dr. Francesco Cafarella
Universita Di Roma "La Sapienza"	Prof. Dr. Mario Paolo Patrangeli
Bogazici Universitesi, Istanbul	Prof. Dr. Semih S. Tezcan
University of Architecture Civil Engineering & Geodesy, Sofia	Prof. dr. A. D. Tepavitcharov Vice Rector Prof. Dr. Eng. Kostadin Topurov
Budapest University of Technology and Economics	Dean Prof. Dr. György Farkas Assoc. Prof. Dr. Lazlo Dunai
University of Pecs, Hungary	Prof. Dr. Peter Lenkei
Slovak University of Technology, Bratislava	Prof. Dr. Ing. Zoltan Agocs
Technischen Universität Wien	Prof. Dr. Günter Ramberger
Technical University of Prague	Prof. Dr. Jiri Studnicka Assoc. Professor Dr. Rotter
Technische Universität Dresden	Prof. Dr.-Ing. habil. Wolfgang Graße
Fachhochschule Potsdam	Prof. Dr. Andreas Kahlow
Technical University of Szczecin	Head of Section, Dr. Wieslav Paczkowski
TU Hamburg-Harburg	Prof. Dr.-Ing. Günter Valtinat

50 countries where the author has given lectures on network arches by the end of 2010.
Norway, Finland, Sweden, Denmark, Russia, Poland, Germany, Holland, Luxemburg, Belgium, France, England, Spain, Portugal, Switzerland, Austria, Czech Republic, Slovakia, Hungary, Romania, Bulgaria, Serbia, Montenegro, Kosovo, Macedonia, Croatia, Turkey, Greece, Italy, Egypt, Pakistan, India, Bangladesh, China, Taiwan, the Philippines, Vietnam, Thailand, Malaysia, Singapore, Indonesia, Australia, New Zealand, Chile, Argentina, Brazil, Peru, Mexico, the USA, Trinidad and Canada.

INDEX THIS INDEX IS NOT UP TO DATE